SINGLE STAGE REQUEST FOR PROPOSAL DOCUMENT

FOR

SELECTION OF BIDDER AS TRANSMISSION SERVICE PROVIDER THROUGH TARIFF BASED COMPETITIVE BIDDING PROCESS

TO

ESTABLISH INTER-STATE TRANSMISSION SYSTEM

FOR

TRANSMISSION SYSTEM FOR INTEGRATION OF KRISHNAGIRI REZ PHASE-I

ISSUED BY

PFC CONSULTING LTD.

(A wholly owned subsidiary of Power Finance Corporation Ltd.)

Registered Office:
1st Floor, "Urjanidhi", 1, Barakhamba Lane,
Connaught Place, New Delhi-110001

January 12, 2026

PFC CONSULTING LIMITED

(A wholly owned subsidiary of Power Finance Corporation Limited)

Corporate Office:
9th Floor, A-Wing, Statesman House
Connaught Place, New Delhi-110001

Request for Proposal Document for selection of Bidder as Transmission Service Provider through tariff based competitive bidding process to establish Inter-State Transmission System for "Transmission System for integration of Krishnagiri REZ Phase-I" is issued by PFC Consulting Limited.

This RFP document is issued to -

M/s. _____

_____

_____

_____

_____

General Manager
PFC Consulting Limited
9th Floor, A-Wing, Statesman House
Connaught Place, New Delhi-110001
Email: pfccl.itp@pfcindia.com
Place: New Delhi
Date:

REQUEST FOR PROPOSAL NOTIFICATION

PFC CONSULTING LIMITED

(A wholly owned subsidiary of Power Finance Corporation Limited)

Corporate Office:
9th Floor, A-Wing, Statesman House
Connaught Place, New Delhi-110001

1. The Government of India, Ministry of Power, vide its gazette notification no **CG-DL-E-01012026-268996** dated December 26, 2025 has notified PFC Consulting Limited (PFCCL) to be the Bid Process Coordinator (BPC) for the purpose of selection of Bidder as Transmission Service Provider (TSP) to establish Inter-State transmission system for **"Transmission System for integration of Krishnagiri REZ Phase-I"** through tariff based competitive bidding process.

2. PFC Consulting Limited (PFCCL) (hereinafter referred to as BPC) hereby invites all prospective Bidders for issue of Request for Proposal (RFP) for selection of Bidder as Transmission Service Provider (TSP) on the basis of international competitive bidding in accordance with the "Tariff Based Competitive Bidding Guidelines for Transmission Service" and "Guidelines for Encouraging Competition in Development of Transmission Projects" issued by Government of India, Ministry of Power under section – 63 of The Electricity Act, 2003 and as amended from time to time. The responsibility of the TSP would be to establish the following Inter-State Transmission System- **"Transmission System for integration of Krishnagiri REZ Phase-I"** (hereinafter referred to as 'Project') on build, own, operate & transfer basis and to provide transmission service:

Transmission System for integration of Krishnagiri REZ Phase-I		
S. No.	**Name of Transmission Element**	**Scheduled COD in months from Effective Date**
1.	Establishment of 4x1500 MVA, 765/400 kV and 5x500 MVA, 400/220kV Krishnagiri Pooling Station near Kodumur in Kurnool district along with 2x330 MVAr (765 kV) bus reactors at Krishnagiri PS with provision of two (2) sections of 4500 MVA each at 400kV level • 765/400kV, 1500 MVA, ICTs – 4 Nos. (13x500 MVA incl. 1 spare unit) • 765kV ICT bays – 4 Nos. • 400kV ICT bays – 4 Nos. • 765kV line bays – 6 Nos. (at Krishnagiri PS for termination of Krishnagiri – Doma, Krishnagiri – Raichur New and Krishnagiri – Sagar 765kV D/c lines) • 765 kV, 330 MVAr Bus Reactor – 2 Nos. (7x110 MVAr inc. 1 switchable spare unit for both bus reactor and line reactor) • 765 kV Bus Reactor bays – 2 Nos. • 400/220kV, 500 MVA, ICTs – 5 Nos. • 400kV ICT bays – 5 Nos. • 220kV ICT bays – 5 Nos. • 220kV line bays – 6 Nos. • 220kV Bus Sectionalizer : 1 set • 220 kV Bus Coupler (BC) Bay – 2 Nos.	30 Months

Transmission System for integration of Krishnagiri REZ Phase-I		
S. No.	**Name of Transmission Element**	**Scheduled COD in months from Effective Date**
	• 220 kV Transfer Bus Coupler (TBC) Bay– 2 Nos. **Future Space Provisions:** • 765/400kV, 1500 MVA, ICTs – 2 Nos. • 765kV ICT bays – 2 Nos. • 400kV ICT bays – 2 Nos. • 400/220kV, 500 MVA, ICTs – 13 Nos. • 400kV ICT bays – 13 Nos. • 220kV ICT bays – 13 Nos. • 765kV line bays – 8 Nos. (with provision for SLR) • 400kV line bays – 12 Nos. (with provision for SLR) • 220kV line bays – 19 Nos. • 220kV Bus Sectionalizer : 2 sets • 220 kV Bus Coupler (BC) Bay – 2 Nos. • 220 kV Transfer Bus Coupler (TBC) Bay – 2 Nos. • 400kV Bus Sectionalizer : 1 set	
2.	+ 300 MVAr STATCOM at Krishnagiri PS • 400kV bay – 1 no. • + 300 MVAr STATCOM – 1 set	
3.	Krishnagiri – Doma 765 kV D/c line with 240 MVAr SLR (convertible) at both ends on both circuits • 765 kV line bays – 2 Nos. (at Doma) • 765 kV, 240 MVAr SLR at Krishnagiri PS – 2 Nos. (7x80 MVAr inc. 1 switchable spare unit) • Switching Equipment for 765 kV SLR at Krishnagiri PS – 2 Nos. • 765 kV, 240 MVAr SLR at Doma PS – 2 Nos. (7x80 MVAr inc. 1 switchable spare unit) • Switching Equipment for 765 kV SLR at Doma PS – 2 Nos.	
4.	Krishnagiri – Raichur New 765 kV D/c line with 240 MVAr SLR (convertible) at Raichur New end on both circuits	
5.	Establishment of 3x1500 MVA, 765/400 kV Sagar substation with 2x330 MVAr (765 kV) bus reactors with space provision for establishment of 220 kV switchyard • 765/400kV, 1500 MVA, ICTs – 3 Nos. (10x500 MVA incl. 1 spare unit) • 765kV ICT bay – 3 Nos. • 400kV ICT bay – 3 Nos. • 765kV line bays – 2 Nos. (at Sagar for termination of Krishnagiri – Sagar 765 kV D/c line) • 765 kV, 330 MVAr Bus Reactors – 2 Nos. (7x110 MVAr inc. 1 switchable spare unit) • 765 kV Bus Reactor bays – 2 Nos. • 400kV line bays – 2 Nos. (at Sagar for termination of Sagar – Nagarjunasagar 400 kV quad D/c line)	

Transmission System for integration of Krishnagiri REZ Phase-I		
S. No.	**Name of Transmission Element**	**Scheduled COD in months from Effective Date**
	Future Space Provisions: • 765/400kV, 1500 MVA, ICTs – 3 Nos. • 765kV ICT bays – 3 Nos. • 400kV ICT bays – 3 Nos. • 765kV line bays – 12 Nos. (with provision for SLR) • 400kV line bays – 10 Nos. (with provision for SLR) • 400kV Bus Sectionalizer : 1 set **Future Space Provisions for 220kV switchyard:** • 400/220kV, 500 MVA, ICTs – 10 Nos. • 400kV ICT bays – 10 Nos. • 220kV ICT bays – 10 Nos. • 220kV line bays – 16 Nos. • 220kV Bus Sectionalizer: 3 set • 220 kV Bus Coupler (BC) Bay – 4 Nos. • 220 kV Transfer Bus Coupler (TBC) Bay – 4 Nos.	
6.	Krishnagiri – Sagar 765 kV D/c line with 240 MVAr SLR (convertible) at both ends on both circuits • 765 kV, 240 MVAr SLR at Krishnagiri PS – 2 Nos. (6x80 MVAr switchable units) • Switching Equipment for 765 kV SLR at Krishnagiri PS – 2 Nos. • 765 kV, 240 MVAr SLR at Sagar – 2 Nos. (7x80 MVAr inc. 1 switchable spare unit) • Switching Equipment for 765 kV SLR at Sagar – 2 Nos.	
7.	Sagar – Nagarjunasagar 400 kV quad D/c line	

Notes:

i) The Krishnagiri – Raichur 765kV D/c line is to be terminated in the existing 240 MVAr bus reactor bays and converting these bus reactors into switchable line reactors. POWERGRID to provide space (free of cost) for the same.

ii) 2 No. of 400kV line bays at Nagarjunasagar for termination of Sagar – Nagarjunasagar 400 kV quad D/c line is in the scope of POWERGRID. Line termination shall be in the scope of TSP.

iii) TSP of Doma S/s to provide space (free of cost) for 2 Nos. of 765kV line bays with provision of SLR at Doma S/s for termination of Krishnagiri – Doma 765 kV D/c line.

3. The TSP shall ensure that design; construction and testing of all equipment, facilities, components and systems of the Project shall be in accordance with the provisions of the Transmission Service Agreement and applicable Rules/ Regulations, Orders and Guidelines issued by the Central Government.

4. **Transmission License:** The TSP shall obtain the Transmission License from the Commission.

5. **Bidding Process:** The Transmission Service Provider shall be selected through tariff based competitive bidding process for the Project based on meeting stipulated Qualification

Requirements prescribed in Clause 2.1 of Section 2 of RFP and the lowest Quoted Transmission Charges discovered from Final Offers quoted during the e-reverse bidding. The selection of the TSP shall be subject to it obtaining Transmission License from the Commission, which, after expiry, may be further extended by such period as deemed appropriate by the Commission under powers vested with it to amend the conditions of the Transmission License.

The entire bidding process shall be conducted on electronic platform created by MSTC Limited.

The Bid shall be a single stage two envelope bid comprising the Technical Bid and the Financial Bid. The Bidders shall submit the Bid online through the electronic bidding platform. In addition to the online submission, the Bidder with lowest Final Offer will be required to submit original hard copies of Annexure 3, Annexure 4 (if applicable), Annexure 6 (if applicable) and Annexure 14 before issuance of LoI. There shall be no physical submission of the Financial Bid.

The Technical Bid shall be opened first and the Financial Bid of only the bidder who have qualified in the Technical Bid shall be opened. The Financial Bid will comprise of two rounds. In the first round the Initial Offer of the responsive bids would be opened and Quoted Transmission Charges of Initial Offer shall be ranked on the basis of ascending order. The Bidders, in the first fifty per cent of the ranking (with any fraction rounded off to higher integer) or four Bidders, whichever is higher, shall qualify for participating in the electronic reverse auction stage and submit their Final Offer.

6. The objective of the bidding process is to select a Successful Bidder pursuant to this RFP, who shall acquire one hundred percent (100%) of the equity shares of **SPV (UNDER INCORPORATION)** along with all its related assets and liabilities as per the provisions of the Share Purchase Agreement, at the Acquisition Price to be intimated by the BPC, twenty (20) days prior to the Bid Deadline.

   The **SPV (UNDER INCORPORATION)**, of which one hundred percent (100%) equity shares will be acquired by the Selected Bidder, shall be responsible as the TSP, for ensuring that it undertakes ownership, financing, development, design, engineering, procurement, construction, commissioning, operation and maintenance of the Project, and to provide Transmission Service as per the terms of the RFP Project Documents.

   The TSP shall ensure transfer of all project assets along with substation land, right of way and clearances to CTU or its successors or an agency as decided by the Central Government after 35 years from COD of project at zero cost and free from any encumbrance and liability. The transfer shall be completed within 90 days after 35 years from COD of project failing which CTU shall be entitled to take over the project assets Suo moto.

7. **Commencement of Transmission Service**: The Bidder shall have to commence Transmission Service in accordance with the provisions of the Transmission Service Agreement.

8. **Transmission Charges**: The Transmission Charges shall be payable by the Designated ISTS Customers in Indian Rupees through the CTU as per Central Electricity Regulatory Commission (Sharing of Inter-State Transmission Charges and Losses) Regulations as amended from time to time. Bidders shall quote the Transmission Charges as per the pre-specified structure, as mentioned in the RFP.

9. **Issue of RFP document:** The detailed terms and conditions for qualification and selection of the Transmission Service Provider for the Project and for submission of Bid are indicated in the RFP document. All those interested in purchasing the RFP document may respond in writing to **General Manager, Tel. +91 11 23443996, Fax +91 11 23443990, Email: pfccl.itp@pfcindia.com** at the address given in para 12 below with a non-refundable fee of **Rs. 5,00,000/- (Rupees Five**

Lakh Only) or US$ 7000/- (US Dollars Seven Thousand Only) plus 18% GST, to be paid via electronic transfer to the following Bank Account**:**

Bank Account Name	**: PFC Consulting Limited**
Account No.	**: 000705036117**
Bank Name	**: ICICI Bank**
IFSC	**: ICIC0000007**
Branch	**: Connaught Place, New Delhi-110001**

latest by **March 16, 2026.** Immediately after issuance of RFP document, the Bidder shall submit the Pre-Award Integrity Pact in the format as prescribed in **Annexure B**, which shall be applicable for and during the bidding process, duly signed on each page by any whole-time Director / Authorized Signatory, duly witnessed by two persons, and shall be submitted by the Bidder in two (2) originals in a separate envelope, duly superscripted with Pre-Award Integrity Pact. The Bidder shall submit the Pre-Award Integrity Pact on non-judicial stamp paper of Rs. 100/- each duly purchased from the National Capital Territory of Delhi. In case the Bidder is in a consortium, the Pre-Award Integrity Pact shall be signed and submitted by each member of the Consortium separately.

The RFP document shall be issued to the Bidders on any working day from **January 12, 2026 to March 16, 2026, between 10:30 hours (IST) to 16:00 hours (IST).** The BPC, on written request and against payment of the above mentioned fee by any Bidder shall promptly dispatch the RFP document to such Bidder by registered mail/ air mail. BPC shall, under no circumstances, be held responsible for late delivery or loss of documents so mailed.

10. **Receipt and opening of Bid:** The Bid must be uploaded online through the electronic bidding platform on or before **15:00 hours (IST) on March 17, 2026**. Technical Bid will be opened by the Bid Opening Committee on the same day at 15:30 hours (IST) in the office of Central Electricity Authority, in the online presence of Bidders' representatives who wish to attend. If the Bid Deadline is a public holiday at the place of submission of Bid, it shall be opened on the next working day at the same time and venue. In addition to the online submission, the Bidder with lowest Final Offer will be required to submit original hard copies of Annexure 3, Annexure 4 (if applicable), Annexure 6 (if applicable) and Annexure 14 before issuance of LoI. Bidders meeting the Qualification Requirements, subject to evaluation as specified in Clause 3.2 to 3.4 shall be declared as "Qualified Bidders" and eligible for opening of Initial Offer.

11. The RFP document is not transferable. BPC reserves the right to reject all Bid and/or annul the process of tariff based competitive bidding for selection of Bidder as TSP to execute the Project without assigning any reason. BPC shall not bear any liability, whatsoever, in this regard.

12. **Nodal person for enquiries and clarifications**

All correspondence and clarification in respect of RFP document shall be addressed to:

General Manager
PFC Consulting Limited
9th Floor, A-Wing, Statesman House
Connaught Place, New Delhi - 110001, India
Tel. + 91-11-23443996
Fax + 91-11-23443990
Email: pfccl.itp@pfcindia.com

DISCLAIMER

1. This Request for Proposal (RFP) document is not an agreement or offer by the BPC to the prospective Bidders or to any other party. The purpose of this RFP document is to provide interested parties with information to assist the formulation of their Bid. The RFP document is based on material and information available in public domain.

2. This RFP, along with its Annexures, is not transferable and the information contained therein are to be used only by the person to whom it is issued. It may not be copied or distributed by the recipient to third parties (other than in confidence to the recipient's professional advisors). In the event that the recipient does not continue with its involvement in the Project in accordance with this RFP, this RFP must be kept confidential.

3. While this RFP has been prepared in good faith, neither the BPC nor its employees or advisors/consultants make any representation or warranty expressed or implied as to the accuracy, reliability or completeness of the information contained in this RFP. The Bidders shall satisfy themselves, on receipt of the RFP document, that the RFP document is complete in all respects. Intimation of any discrepancy shall be given to this office immediately. If no intimation is received from any Bidder within ten (10) days from the date of issue of this RFP document on or before the date & time mentioned in this RFP, it shall be considered that the issued document, complete in all respects, has been received by the Bidders.

   This bidding process is in accordance with the Bidding Guidelines issued by Ministry of Power, Government of India under Section 63 of the Electricity Act, 2003. Revisions or amendments in these Bidding Guidelines may cause the BPC to modify, amend or supplement this RFP document, including the RFP Project Documents to be in conformance with the Bidding Guidelines.

4. This RFP document includes statements, which reflect various assumptions arrived at by BPC in order to give a reflection of current status in the RFP. These assumptions should not be entirely relied upon by Bidders in making their own assessments. This RFP document does not purport to contain all the information each Bidder may require and may not be appropriate for all persons. It is not possible for BPC to consider the investment objectives, financial situation and particular needs of each party who reads or uses this RFP document. Certain Bidders may have a better knowledge of the Project than the others. Each Bidder should conduct its own investigations and analysis and should check the accuracy, reliability and completeness of the information in this RFP document and obtain independent advice from appropriate sources.

5. Neither BPC nor their employees or consultants make any representation or warranty as to the accuracy, reliability or completeness of the information in this RFP document.

6. Neither BPC, its employees nor its consultants will have any liability to any Bidder or any other person under the law of contract, tort, the principles of restitution or unjust enrichment or otherwise for any loss, expense or damage which may arise from or be incurred or suffered in connection with anything contained in this RFP document, any matter deemed to form part of this RFP document, the award of the Project, the information supplied by or on behalf of BPC or its employees, any consultants or otherwise arising in any way from the qualification process for the said Project.

7. By participating in the bidding process, each of the Bidder shall have acknowledged and accepted that it has not been induced to enter into such agreement by any representation or warranty, expressed or implied, or relied upon any such representation or warranty by or on behalf of BPC or any person working in the bidding process.

8. BPC may in its absolute discretion, but without being under any obligation to do so, update, amend

or supplement this RFP document. Such updations, amendments or supplements, if any, will however be circulated to the Bidders not later than 15 days prior to the last date for submission of Bid.

9. Each Bidder unconditionally agrees, understands and accepts that the BPC reserves the rights to accept or reject any or all Bids without giving any reason. Neither the BPC nor its advisers shall entertain any claim of any nature, whatsoever, including without limitations, any claim seeking expenses in relation to the preparation of Bids.

10. This RFP may be withdrawn or cancelled by the BPC at any time without assigning any reasons thereof. BPC further reserves the right, at its complete discretion to reject any or all of the Bids without assigning any reasons whatsoever.

INDEX

SECTION	CONTENTS	PAGE NO.
	DEFINITIONS	12
1.	INTRODUCTION	17
2.	INFORMATION AND INSTRUCTIONS FOR BIDDERS	24
3.	EVALUATION OF THE TECHNICAL AND FINANCIAL BID	49
4.	ANNEXURES FOR BID	55
	ANNEXURES	
1	Format for the Covering Letter	57
2	Format for Letter of Consent from Consortium Members	60
3	Format for evidence of authorized signatory's authority (Power of Attorney)	62
4	Format for Power of Attorney to be provided by each of the other members of the Consortium in favor of the Lead Member	64
5	Format for Bidder's composition and ownership structure and Format for Authorization	66
6	Format for Consortium Agreement	69
7A	Format for Qualification Requirement – Net worth	74
7B	Format for Technical Requirement	77
7C	Format for Technical and Financial Requirement – Relationship & Equity Shareholding	80
7D	Format for Additional Information for verification of Financial and Technical Capabilities of Bidders	82
8	Format for Undertaking and Details of Equity Investment	85
9	Format for Authorization from Parent / Affiliate of Bidding Company / Member of Bidding Consortium whose technical / financial capability has been used by the Bidding Company / Member of Bidding Consortium.	89
10	Format for Undertaking by Technically/Financially Evaluated Entity/Ultimate Parent Company	91
11	Format for Board Resolution	93
11A	Illustration for Applicable Board Resolution Requirements under Clause 2.5.2	95
12	Format for illustration of Affiliates	98
13	Format for disclosure	99
14	Format For Bid Bond	100
14A	Format of Insurance Surety Bond For Bid Security	102
14B	Format of Payment On Order Instrument For Bid Security	104
15	Format for Contract Performance Guarantee	106

SECTION	CONTENTS	PAGE NO.
15A	Format For Surety Insurance Bond For Contract Performance Guarantee	108
15B	Format For Payment on Order Instrument for Contract Performance Guarantee	111
16	Format for Checklist for Technical Bid Submission Requirements	114
17	List of Banks	117
18	Grid Map of the Project	118
19	Format for Clarifications / Amendments on the RFP / RFP Project Documents	119
20	Formats For RFP Project Documents	120
21	Format For Financial Bid	121
22	Format of Affidavit	122
23	Annexure A	124
24	Annexure-B	126
25	Annexure-C	132

DEFINITIONS

Any capitalized term, used but not defined in this RFP, shall have the meaning ascribed to such term in the RFP Project Documents, or the Bidding Guidelines, in that order. In absence of availability of definitions in the foregoing references, the capitalized terms shall be interpreted in accordance with the Electricity Act 2003, Grid Code or any other relevant electricity law, rule or regulation prevalent in India, as amended or re-enacted from time to time, in that order.

The following terms are defined for use in this RFP:

"Acquisition Price" shall have the same meaning as defined in the Share Purchase Agreement;

"Affiliate" shall mean a company that either directly or indirectly

i. controls or

ii. is controlled by or

iii. is under common control with

a Bidding Company (in the case of a single company) or a Member (in the case of a Consortium) and "**control**" means ownership by one entity of at least twenty six percent (26%) of the voting rights of the entity. As an illustration a chart is annexed hereto as Annexure – 12;

"Bid" shall mean Technical Bid and Financial Bid (Initial Offer and Final Offer) submitted by the Bidder, in response to this RFP, in accordance with the terms and conditions thereof;

"Bidder" shall mean either a single company (including its permitted successors and legal assigns) or a Consortium of companies (including its permitted successors and legal assigns) submitting a Bid in response to this RFP. Any reference to the Bidder includes Bidding Company, Bidding Consortium/ Consortium, Member in a Bidding Consortium and Lead Member of the Bidding Consortium jointly and severally, as the context may require;

"Bidding Company" shall refer to such single company (including its permitted successors and legal assigns) that has submitted a Bid for the Project;

"Bidding Consortium/ Consortium" shall refer to a group of companies (including their permitted successors and legal assigns) that has collectively submitted a Bid for the Project;

"Bidding Guidelines" shall mean the "Tariff Based Competitive-Bidding Guidelines for Transmission Service" and "Guidelines for Encouraging Competition in Development of Transmission Projects" issued by Government of India, Ministry of Power under Section – 63 of Electricity Act as amended from time to time;

"Bid Bond" shall mean the unconditional and irrevocable" bank guarantee or unconditional and irrevocable Insurance Surety Bond issued by Insurance Company authorized by Insurance Regulatory and Development Authority of India) or Payment on Order Instrument for **Rs.81.70 Crore** (**Rupees Eighty One Crore Seventy Lakh Only)** Only, to be submitted along with the Technical Bid by the Bidder under Clause 2. 11 of this RFP, as per the format prescribed in Annexure 14 (for Bank Guarantee) or Annexure 14A (for Insurance Surety Bond) or Annexure 14B (for Payment on Order)

"Bid Deadline" shall mean the last date and time for submission of online Bid in response to this RFP, specified in Clause 2.7.1;

"Bid Process Coordinator or BPC" shall mean a person or its authorized representative as notified by the Government of India, responsible for carrying out the process for selection of Bidder who will acquire Transmission Service Provider;

"Bid Security Declaration" shall mean the declaration to be submitted along with the Technical Bid by the Bidder in lieu of the Bid Bond as per the format prescribed in annexure 14A (only applicable for projects for which RFP has been issued before 31.12.2021)

"CEA" shall mean the Central Electricity Authority constituted under Section - 70 of the Electricity Act;

"Commission" or "CERC" shall mean the Central Electricity Regulatory Commission of India constituted under Section-76 of The Electricity Act, 2003 and any successors and assigns;

"Conflict of Interest" A Bidder shall be considered to be in a Conflict of Interest with one or more Bidders in the same bidding process if they have a relationship with each other, directly or through a common company, that puts them in a position to have access to information about or influence the Bid of another Bidder.

Provided that if two or more bidders in the bidding process have formed a Joint Venture Company or Consortium to execute another project, the Bidders will not be considered to have Conflict of Interest;

"Commercial Operation Date (COD)" shall mean the date as per Article 6.2 of the Transmission Service Agreement;

"Consents, Clearances, Permits" shall mean all authorizations, licenses, approvals, registrations, permits, waivers, privileges, acknowledgements, agreements, or concessions required to be obtained from or provided by any concerned authority for the development, execution and performance of Project including without any limitation on the construction, ownership, operation and maintenance of the transmission lines and/or sub-stations;

"Contract Performance Guarantee" shall have the meaning as per Clause 2.12 of this RFP;

"Contract Year" shall mean the period beginning on the Scheduled COD, and ending on the immediately succeeding March 31 and thereafter each period of 12 months beginning on April 1 and ending on March 31 provided that:

(i) the last Contract Year shall end on the last day of the term of the Transmission Service Agreement;

"Infrastructure sector" shall mean such sectors notified by Department of Economic Affairs in its Gazette Notification no. 13/1/2017-INF dated 14th November, 2017 and as amended from time to time;

"CTU/Central Transmission Utility" shall have same meaning as defined in the Electricity Act, 2003;

"Designated ISTS Customers" or "DICs" shall have the meaning as ascribed in Regulation 2(l) of Central Electricity Regulatory Commission (Sharing of inter-State Transmission Charges and Losses) Regulation 2020 and as amended or modified from time to time;

"Effective Date" shall have the meaning as ascribed thereto in the Transmission Service Agreement;

"Element" shall mean-each Transmission Line or each circuit of the Transmission Lines (where there are more than one circuit) or each bay of the Sub-station or switching station or HVDC terminal or inverter station of the Project, including ICTs, Reactors, SVC, FSC, etc. forming part of the ISTS which will be owned, operated and maintained by the concerned ISTS Licensee, and which may have a separate scheduled COD

as per Schedule 2 of the Transmission Service Agreement and may have a separate percentage for recovery of Transmission Charges on achieving COD as per Schedule 5 of the Transmission Service Agreement;

"**National Committee on Transmission**" shall mean the committee constituted by the Ministry of Power, Government of India in term of the "Guidelines for Encouraging Competition in Development of Transmission Projects", as notified from time to time

"Final Offer" shall mean the Quoted Transmission Charges, required to be submitted as part of the Financial Bid on the electronic bidding platform during the e-reverse bidding stage. In case, no Final Offer is received during the e-reverse bidding stage then the lowest "Initial Offer" shall be deemed to be the Final Offer**;**

"Financial Bid" shall mean the Initial Offer and Final Offer, containing the Bidder's Quoted Transmission Charges, as per the format at Annexure – 21 of this RFP**;**

"Financially Evaluated Entity" shall mean the company which has been evaluated for the satisfaction of the financial requirement set forth in Clause **2.1.3** hereof;

"Government" shall mean the Central Government;

"Grid Code" / "IEGC" or **"State Grid Code"** shall mean the Grid Code specified by the Central Commission under clause (h) of sub-section (1) of Section 79 of the Electricity Act and/or the State Grid Code as specified by the concerned State Commission referred under clause (h) of sub-section (1) of Section 86 of the Electricity Act as applicable;

"Initial Offer" shall mean the Quoted Transmission Charges, required to be submitted as part of the Financial Bid on the electronic bidding platform along with the Technical Bid**;**

"Inter State Generating Station" or "ISGS" shall mean a Central / other generating station in which two or more states have shares and whose scheduling is to be coordinated by the Regional Load Dispatch Centre;

"Inter-State Transmission System" shall have same meaning as defined in the Electricity Act, 2003;

"Lead Member of the Bidding Consortium" or "Lead Member" shall mean a company who commits at least twenty six percent (26%) equity stake in the Project, meets the technical requirement as per Clause 2.1.2 and so designated by other Member(s) in Bidding Consortium;

"Letter of Intent" or "LoI" shall mean the letter to be issued by the BPC to the Bidder, who has been identified as the selected bidder, for award of the Project to such Bidder;

"Member in a Bidding Consortium/Member" shall mean each company in the Bidding Consortium;

"MOP" shall mean the Ministry of Power, Government of India;

"MOEF" shall mean the Ministry of the Environment and Forests, Government of India;

"Nodal Agency" shall mean CTU, which shall execute and implement the Transmission Service Agreement (TSA);

Provided that while taking major decisions, CTU shall consult CEA on technical matters and any other matter it feels necessary.

"Parent Company" shall mean an entity that holds at least twenty six percent (26%) of the paid - up equity capital directly or indirectly in the Bidding Company or in the Member in a Bidding Consortium,

as the case may be;

"Payment on Order Instrument" shall mean Letter of Undertaking from Indian Renewable Energy Development Agency Limited (IREDA) or Power Finance Corporation Limited (PFC) or REC Limited (REC) [the three non-banking financial institutions under Ministry of New & Renewable Energy (MNRE)/ Ministry of Power (MoP)], to pay in case situation of default of Transmission Service Provider (TSP) in terms of tender conditions/ Power Purchase Agreement (PPA) arises. Such Letter(s) will have same effect as that of a Bank Guarantee issued by any public sector bank, Such "Payment on Order instrument" would have terms and conditions similar to that of any Bank Guarantee given by any public sector bank and would promise to pay the Nodal Agency on demand within stipulated time. TSPs can seek such Letter(s) by offering due security to the above-mentioned three non-banking financial institutions mentioned above (IREDA, PFC & REC). Nodal Agency shall not accept the instrument of 'Letter of Undertaking' as described above or in any other from, from any other non-banking financial institutions or bank, except IREDA, PFC & REC.

"Qualification Requirements" shall mean the qualification requirements as set forth in Section-2, Clause 2.1 of this RFP;

"Quoted Transmission Charges" shall mean the quoted single annual Transmission Charges submitted online through the electronic bidding platform by the Bidder as part of its Financial Bid as per the format in Annexure – 21 of this RFP;

"RFP" shall mean Request for Proposal document along with all schedules, formats, annexure and RFP Project Documents attached hereto, issued by BPC for tariff based competitive bidding process for selection of bidder who will acquire the TSP through e-reverse bidding to execute the Project, and shall include any modifications, amendments or alterations or clarifications thereto;

"RFP Project Documents" shall mean the following documents to be entered into in respect of the Project, by the parties to the respective agreements:

a. Transmission Service Agreement (TSA),

b. Share Purchase Agreement,

c. Agreement(s) required, if any, under Central Electricity Regulatory Commission (Sharing of Inter-State Transmission Charges and Losses) Regulations as amended from time to time and

d. Any other agreement, as may be required;

"Scheduled COD" shall have the meaning as ascribed hereto in Clause 2.6 of this RFP;

"Statutory Auditor" shall mean the auditor appointed under the provisions of the Companies Act, 1956 / Companies Act, 2013 (as the case may be) or under the provisions of any other applicable governing law;

"Share Purchase Agreement" shall mean the agreement amongst **PFC Consulting Limited**, **SPV (UNDER INCORPORATION)** and the Successful Bidder for the purchase of one hundred (100%) per cent of the shareholding of the **SPV (UNDER INCORPORATION)** for the Acquisition Price, by the Successful Bidder on the terms and conditions as contained therein;

"Successful Bidder" or **"Selected Bidder"** shall mean the Bidder selected pursuant to this RFP to acquire one hundred percent (100%) equity shares of **SPV (UNDER INCORPORATION)**, along with all its related assets and liabilities, which will be responsible as the TSP to establish the Project on build, own, operate and transfer basis as per the terms of the Transmission Service Agreement and other RFP Project Documents;

"Survey Report" shall mean the report containing initial information regarding the Project and other details provided as per the provisions of Clause 1.6.2.1.1 of this RFP;

"Technical Bid" shall mean the bid submitted online through the electronic bidding platform, containing the documents as listed out in Clause 2.5.2 of this RFP;

"Technically Evaluated Entity" shall mean the company which has been evaluated for the satisfaction of the technical requirement set forth in Clause 2.1.2 hereof;

"Transmission Charges" shall mean the Final Offer quoted by Selected Bidder and adopted by the Commission, and as computed in terms of the provisions of Schedule 4 of the TSA, payable to the ISTS Licensee by the Designated ISTS Customers, and collected / disbursed by the CTU, as per Central Electricity Regulatory Commission (Sharing of Inter-State Transmission Charges and Losses) Regulations as amended from time to time;

"Transmission License" shall mean the license granted by the Commission in terms of the relevant regulations for grant of such license issued under the Electricity Act, 2003;

"Transmission Service Agreement" or **"TSA"** shall mean the agreement entered into between Nodal Agency and the TSP, pursuant to which the TSP shall build, own, operate and transfer the Project and make available the assets of the Project on a commercial basis;

"Transmission Service Provider" or "TSP" shall mean **SPV (UNDER INCORPORATION)** which has executed the Transmission Service Agreement and which shall be acquired by the Selected Bidder;

"Ultimate Parent Company" shall mean an entity which owns at least twenty six percent (26%) equity in the Bidding Company or Member of a Consortium, (as the case may be) and in the Technically Evaluated Entity and/or Financially Evaluated Entity (as the case may be) and such Bidding Company or Member of a Consortium, (as the case may be) and the Technically Evaluated Entity and/or Financially Evaluated Entity (as the case may be) shall be under the direct control or indirectly under the common control of such entity.

SECTION – 1

INTRODUCTION

SECTION 1

1. INTRODUCTION

1.1 The Government of India, Ministry of Power, vide its gazette notification no **CG-DL-E-01012026-268996** dated **December 26, 2025** has notified PFC Consulting Limited (PFCCL) to be the Bid Process Coordinator (BPC) for the purpose of selection of Bidder as Transmission Service Provider (TSP) to establish Inter-State transmission system for **"Transmission System for integration of Krishnagiri REZ Phase-I"** through tariff based competitive bidding process.

The BPC hereby invites Bids from all prospective Bidders in accordance with this Request for Proposal (RFP) to select prospective Transmission Service Provider (TSP) in accordance with the "Tariff Based Competitive-Bidding Guidelines for Transmission Service" and "Guidelines for Encouraging Competition in Development of Transmission Projects" issued by Government of India, Ministry of Power under Section – 63 of the Electricity Act. The BPC shall select the Bidder having the prescribed technical and financial capability to become TSP and be responsible for establishing the Project in the state(s) of Andhra Pradesh. The TSP will make the Project available against payment of Transmission Charges, as adopted by the Commission, payable to the TSP, as per Central Electricity Regulatory Commission (Sharing of Inter-State Transmission Charges and Losses) Regulations as amended from time to time.

1.2 The TSP will be required to establish the following Inter State Transmission System for "**Transmission System for integration of Krishnagiri REZ Phase-I"** (hereinafter referred to as 'Project') on build, own, operate and transfer basis, and to provide transmission service.

Transmission System for integration of Krishnagiri REZ Phase-I		
S. No.	**Name of Transmission Element**	**Scheduled COD in months from Effective Date**
1.	Establishment of 4x1500 MVA, 765/400 kV and 5x500 MVA, 400/220kV Krishnagiri Pooling Station near Kodumur in Kurnool district along with 2x330 MVAr (765 kV) bus reactors at Krishnagiri PS with provision of two (2) sections of 4500 MVA each at 400kV level • 765/400kV, 1500 MVA, ICTs – 4 Nos. (13x500 MVA incl. 1 spare unit) • 765kV ICT bays – 4 Nos. • 400kV ICT bays – 4 Nos. • 765kV line bays – 6 Nos. (at Krishnagiri PS for termination of Krishnagiri – Doma, Krishnagiri – Raichur New and Krishnagiri – Sagar 765kV D/c lines) • 765 kV, 330 MVAr Bus Reactor – 2 Nos. (7x110 MVAr inc. 1 switchable spare unit for both bus reactor and line reactor) • 765 kV Bus Reactor bays – 2 Nos. • 400/220kV, 500 MVA, ICTs – 5 Nos. • 400kV ICT bays – 5 Nos. • 220kV ICT bays – 5 Nos. • 220kV line bays – 6 Nos. • 220kV Bus Sectionalizer : 1 set • 220 kV Bus Coupler (BC) Bay – 2 Nos. • 220 kV Transfer Bus Coupler (TBC) Bay– 2 Nos. **Future Space Provisions:**	30 Months

Transmission System for integration of Krishnagiri REZ Phase-I		
S. No.	**Name of Transmission Element**	**Scheduled COD in months from Effective Date**
	• 765/400kV, 1500 MVA, ICTs – 2 Nos. • 765kV ICT bays – 2 Nos. • 400kV ICT bays – 2 Nos. • 400/220kV, 500 MVA, ICTs – 13 Nos. • 400kV ICT bays – 13 Nos. • 220kV ICT bays – 13 Nos. • 765kV line bays – 8 Nos. (with provision for SLR) • 400kV line bays – 12 Nos. (with provision for SLR) • 220kV line bays – 19 Nos. • 220kV Bus Sectionalizer : 2 sets • 220 kV Bus Coupler (BC) Bay – 2 Nos. • 220 kV Transfer Bus Coupler (TBC) Bay – 2 Nos. • 400kV Bus Sectionalizer : 1 set	
2.	+ 300 MVAr STATCOM at Krishnagiri PS • 400kV bay – 1 no. • + 300 MVAr STATCOM – 1 set	
3.	Krishnagiri – Doma 765 kV D/c line with 240 MVAr SLR (convertible) at both ends on both circuits • 765 kV line bays – 2 Nos. (at Doma) • 765 kV, 240 MVAr SLR at Krishnagiri PS – 2 Nos. (7x80 MVAr inc. 1 switchable spare unit) • Switching Equipment for 765 kV SLR at Krishnagiri PS – 2 Nos. • 765 kV, 240 MVAr SLR at Doma PS – 2 Nos. (7x80 MVAr inc. 1 switchable spare unit) • Switching Equipment for 765 kV SLR at Doma PS – 2 Nos.	
4.	Krishnagiri – Raichur New 765 kV D/c line with 240 MVAr SLR (convertible) at Raichur New end on both circuits	
5.	Establishment of 3x1500 MVA, 765/400 kV Sagar substation with 2x330 MVAr (765 kV) bus reactors with space provision for establishment of 220 kV switchyard • 765/400kV, 1500 MVA, ICTs – 3 Nos. (10x500 MVA incl. 1 spare unit) • 765kV ICT bay – 3 Nos. • 400kV ICT bay – 3 Nos. • 765kV line bays – 2 Nos. (at Sagar for termination of Krishnagiri – Sagar 765 kV D/c line) • 765 kV, 330 MVAr Bus Reactors – 2 Nos. (7x110 MVAr inc. 1 switchable spare unit) • 765 kV Bus Reactor bays – 2 Nos. • 400kV line bays – 2 Nos. (at Sagar for termination of Sagar – Nagarjunasagar 400 kV quad D/c line) **Future Space Provisions:** • 765/400kV, 1500 MVA, ICTs – 3 Nos. • 765kV ICT bays – 3 Nos. • 400kV ICT bays – 3 Nos. • 765kV line bays – 12 Nos. (with provision for SLR) • 400kV line bays – 10 Nos. (with provision for SLR)	

Transmission System for integration of Krishnagiri REZ Phase-I		
S. No.	**Name of Transmission Element**	**Scheduled COD in months from Effective Date**
	• 400kV Bus Sectionalizer : 1 set **Future Space Provisions for 220kV switchyard:** • 400/220kV, 500 MVA, ICTs – 10 Nos. • 400kV ICT bays – 10 Nos. • 220kV ICT bays – 10 Nos. • 220kV line bays – 16 Nos. • 220kV Bus Sectionalizer: 3 set • 220 kV Bus Coupler (BC) Bay – 4 Nos. • 220 kV Transfer Bus Coupler (TBC) Bay – 4 Nos.	
6.	Krishnagiri – Sagar 765 kV D/c line with 240 MVAr SLR (convertible) at both ends on both circuits • 765 kV, 240 MVAr SLR at Krishnagiri PS – 2 Nos. (6x80 MVAr switchable units) • Switching Equipment for 765 kV SLR at Krishnagiri PS – 2 Nos. • 765 kV, 240 MVAr SLR at Sagar – 2 Nos. (7x80 MVAr inc. 1 switchable spare unit) • Switching Equipment for 765 kV SLR at Sagar – 2 Nos.	
7.	Sagar – Nagarjunasagar 400 kV quad D/c line	

Notes:

i) The Krishnagiri – Raichur 765kV D/c line is to be terminated in the existing 240 MVAr bus reactor bays and converting these bus reactors into switchable line reactors. POWERGRID to provide space (free of cost) for the same.

ii) 2 No. of 400kV line bays at Nagarjunasagar for termination of Sagar – Nagarjunasagar 400 kV quad D/c line is in the scope of POWERGRID. Line termination shall be in the scope of TSP.

iii) TSP of Doma S/s to provide space (free of cost) for 2 Nos. of 765kV line bays with provision of SLR at Doma S/s for termination of Krishnagiri – Doma 765 kV D/c line.

1.3 Description of the Transmission Scheme

Govt. of India has set a target of 500 GW generation capacity from non-fossil fuel resources by 2030. In this direction, MNRE has identified addition of 86 GW RE Potential in the State of Andhra Pradesh, Telangana, Karnataka and Tamil Nadu (Offshore) in Southern Region. Out of the identified (86 GW) RE Potential in Southern Region, 51 GW has been identified in the State of Andhra Pradesh (Ananthapur – 20 GW, Kurnool – 23 GW & Kadapa – 8 GW).

The "Transmission System for integration of Krishnagiri REZ Phase-I" shall facilitate immediate integration & evacuation of power from RE generation projects for about 4.5 GW of RE potential in Kurnool area out of the identified total potential of 23 GW in Kurnool, Andhra Pradesh.

The Transmission System was discussed and agreed in the 38th CMETS-SR held on 02.06.2025. The scheme was further discussed and agreed in the 55th SRPC meeting held on 26.07.2025.

The National Committee on Transmission in its 32nd meeting held on 12.08.2025 has recommended the implementation of the subject transmission scheme through TBCB route and has identified the PFC Consulting Limited as BPC for bidding of the transmission scheme.

Subsequently, the Scheme was discussed in the 33rd NCT meeting held on 16.09.2025 wherein it was informed that in order to ensure optimum utilization of the transmission lines, RE power from Krishnagiri REZ-Phase-1 (4.5 GW) and of Ananthapuram-III REZ-Phase-l (4.5GW) may be evacuated through the already identified Transmission System in Kurnool and Ananthapuram areas respectively during non-solar hours with implementation of co-located BESS. NCT opined that possibility may be explored for grant of additional connectivity for optimal utilization of the Transmission System during non-solar hours.

The scheme was again discussed in the 35th NCT meeting held on 19.11.2025 wherein it was deliberated that holding up of implementation of Krishnagiri PS may lead to non-development of RE generation in that area and after detailed deliberations, NCT recommended that Transmission Scheme for Krishnagiri may be taken up for implementation. Ministry of Power vide Gazette notification dated 26.12.2025 has notified the transmission scheme for implementation through TBCB route.

1.4 **Transmission Grid Map**

Transmission Grid Map indicating the location of the Project is enclosed as **Annexure 18** of this RFP for information and reference of the Bidders**.**

1.5 The objective of the bidding process is to select a Successful Bidder pursuant to this RFP, who shall acquire one hundred percent (100%) of the equity shares of **SPV (UNDER INCORPORATION)** along with all its related assets and liabilities as per the provisions of the Share Purchase Agreement, at the Acquisition Price to be intimated by the BPC, twenty (20) days prior to the Bid Deadline.

The **SPV (UNDER INCORPORATION)**, of which one hundred percent (100%) equity shares will be acquired by the Selected Bidder, shall be responsible as the TSP, for ensuring that it undertakes ownership, financing, development, design, engineering, procurement, construction, commissioning, operation and maintenance of the Project, and to provide Transmission Service as per the terms of the RFP Project Documents.

The TSP shall ensure transfer of all project assets along with substation land, right of way and clearances to CTU or its successors or an agency as decided by the Central Government after 35 years from COD of project at zero cost and free from any encumbrance and liability. The transfer shall be completed within 90 days after 35 years from COD of project failing which CTU shall be entitled to take over the project assets Suo moto.

1.6 Brief Scope of Work

1.6.1 **Scope of Transmission Service Provider**

The TSP's scope of work for the Project shall comprise, but not necessarily be limited to the following:

1.6.1.1 Establishment, operation and maintenance of the Project on build, own, operate and transfer basis and completion of all the activities for the Project, including survey, detailed project report

formulation, arranging finance, project management, necessary Consents, Clearances and Permits (way leave, environment & forest, civil aviation, railway/ road/ river/ canal/ power crossing/ PTCC, etc.), land compensation, design, engineering, equipment, material, construction, erection, testing & commissioning. Further, the actual location of Greenfield Substation (Switching Station or HVDC Terminal or Inverter Station) in the scope of TSP:

- For Generation Pooling Substation shall not be beyond **3 Km** radius of the location proposed by BPC in their survey report.
- For Load Serving Substation within the scope of TSP shall not be beyond **5 Km** radius of the location proposed by the BPC in their Survey Report.
- For an Intermediate Substation shall not be beyond **10 Km** radius of the location proposed by the BPC in their Survey Report.

1.6.1.2 The TSP shall ensure that design, construction and testing of all equipment, facilities, components and systems of the Project shall be in accordance with Transmission Service Agreement and applicable Rules/ Regulations, Orders and Guidelines issued by the Central Government.

1.6.1.3 The TSP shall ensure timely completion of entire scope of Project in all respects and its operation and maintenance, as shall be specified in the RFP documents.

1.6.1.4 The TSP shall seek Transmission License from the Commission, as per the provisions of the Electricity Act and regulations made thereunder.

1.6.1.5 The TSP shall seek approval under Section 164 of Electricity Act, from CEA after acquisition of **SPV (UNDER INCORPORATION)**. The approval shall be granted by CEA generally within 30 days but in no case later than 45 days from the date of receipt of application (complete in all aspects).

1.6.2 **Scope of Bid Process Coordinator (BPC)**

BPC's scope of work is briefly outlined hereunder:

1.6.2.1 The BPC has initiated development of the Project and shall be responsible for the tasks in this regard as specified hereunder:

1. Provide to the Bidders a Survey Report for the Project at least forty five (45) days prior to the Bid Deadline. The Survey Report shall include the suggested route with approximate route length, type of terrain likely to be encountered and its likely implication in terms of Right of Way (ROW), statutory clearances, location of substations or converter stations and land area to be acquired for the substation or converter station.

2. To obtain approval for laying of overhead transmission lines under Section 68 of Electricity Act, from the Government at least twenty (20) days prior to Bid Deadline.

3. To initiate acquisition of land for location specific substations, switching stations or HVDC terminal or inverter stations, if required.

4. To initiate process of seeking forest clearance, if required.

5. The BPC shall intimate to the Bidders, the Acquisition Price payable by the Selected Bidder to the **PFC Consulting Limited** for the acquisition of one hundred percent (100%) of the equity shareholding of **SPV (UNDER INCORPORATION)**, along with all its related assets and liabilities at least twenty (20) days prior to the Bid Deadline.

6. The BPC shall ensure issuance of all finalized RFP Project Documents, at least fifteen (15) days prior to the Bid Deadline.

   Provided that for any delay in meeting the above obligations of the BPC within the specified time period above, the Bid Deadline as per Clause 2.7.1 shall be extended on a day for day basis.

1.6.2.2 The details and documents as may be obtained by the BPC/ project specific SPV in relation to the Project shall be handed over to the TSP on an as-is-where-is basis, so that it may take further actions to obtain Consents, Clearances and Permits.

1.7 All costs (including direct and indirect) incurred by the BPC/ project specific SPV in connection with the activities concerning the Project shall be recovered from the TSP, which shall be included in the Acquisition Price.

1.8 The Project is required to be completed progressively in accordance with the schedule prescribed in this RFP.

1.9 A company under the Companies Act, 1956/ Companies Act, 2013 by the name **SPV (UNDER INCORPORATION)** has been incorporated to initiate the activities for execution of the Project. The said company shall be acquired by the successful Bidder as per terms and conditions as may be prescribed in RFP.

1.10 The Ministry of Power and the appropriate state government(s) shall provide their support to the TSP, on best endeavor basis, in enabling the TSP to develop the Project.

1.11 All Bidders are required to submit their Bid in accordance with the instructions set forth in this RFP.

1.12 Once the Successful Bidder is selected, the details and documents as may be obtained by the BPC/ project specific SPV in relation to the Project, shall be handed over to the Successful Bidder on as is where basis, so that it may take further actions to obtain all necessary Consents, Clearances and Permits and the TSP shall not be entitled for any extensions in the Scheduled COD of the Project except as provided for in the TSA.

1.13 The assets of the Project shall be made available on a commercial basis as per the terms and conditions of the Transmission Service Agreement and Central Electricity Regulatory Commission (Sharing of Inter-State Transmission Charges and Losses) Regulations as amended from time to time.

SECTION - 2

INFORMATION AND INSTRUCTIONS FOR BIDDERS

SECTION – 2

2. INFORMATION AND INSTRUCTIONS FOR BIDDERS

2.1 Qualification Requirements

2.1.1 The Bidder should be a company duly incorporated under the relevant laws (Bidding Company) or a Consortium of companies (Bidding Consortium) with one of the companies acting as the Lead Member of the Bidding Consortium. The Bidder shall be selected on meeting the Qualification Requirements specified in Section 2 of this RFP, as demonstrated by the Bidder's Technical Bid and the lowest Quoted Transmission Charges discovered from Final Offers quoted during the e-reverse bidding. A Bidding Consortium can participate in the bidding process for the Project if any Member of the Consortium has purchased the RFP document for such Project. Bidder who agrees and undertake to procure the products associated with the Transmission System as per provisions of Public Procurement (Preference to Make in India) Orders No. P45021/2/2017-PP (BE-II)-Part (4) Vol.II dated 19.07.2024, as amended from time to time read with Department for Promotion of Industry and Internal Trade (DPIIT) orders in this regard, shall be eligible hereunder. Further, it is clarified that Procuring Entity as defined in orders shall deemed to have included Selected Bidder and/ or TSP.

Besides, Department of Expenditure, Ministry of Finance vide OM No. F.7/10/2021-PPD (1) dated 23.02.2023, as amended from time to time, have issued directions regarding public procurement from a bidder of a country, which shares land border with India are also applicable.

2.1.2 **Technical requirement to be met by the Bidding Company or Lead Member of Bidding Consortium**

The Bidder must fulfill any one of the following technical requirements:

(i) Experience of development of projects in the Infrastructure Sector in the last five (5) years with aggregate capital expenditure of not less than **Rs.4,085 Crore (Rupees Four Thousand Eighty Five Crore Only)** or equivalent USD (calculated as per provisions in Clause 3.4.1). However, the capital expenditure of each project shall not be less than **Rs.817 Crore (Rupees Eight Hundred Seventeen Crore Only)** or equivalent USD (calculated as per provisions in Clause 3.4.1).

For this purpose, capital expenditure incurred on projects that have been commissioned/ completed at least seven (7) days prior to Bid Deadline shall be considered. The capital expenditure discussed above shall be as capitalized and reflected in the audited books of accounts of the Technically Evaluated Entity. In case a clearly identifiable part of a project has been put into commercial operation, the capital expenditure on such part of the project shall be considered. The Technically Evaluated Entity must have either executed such projects itself or must have held directly or indirectly at least twenty six percent (26%) of the shareholding in the company that has executed the project(s) from the date of financial closure of the project(s) till the time of commissioning/completion of such project(s).

OR

(ii) Experience in construction of project in infrastructure sector: The Technically Evaluated Entity should have received aggregate payments not less than **Rs.4,085 Crore (Rupees Four Thousand Eighty Five Crore Only)** or equivalent USD (calculated as per provisions

in Clause 3.4.1) from its client(s) for construction works fully completed during the last 5 (five) financial years. However, the payment received from each project shall not be less than **Rs.817 Crore (Rupees Eight Hundred Seventeen Crore Only)** or equivalent USD (calculated as per provisions in Clause 3.4.1).

For this purpose, payments received on projects that have been commissioned/ completed at least seven (7) days prior to Bid Deadline shall be considered. Further only the payments (gross) actually received, during such 5 (five) financial years shall qualify for purposes of computing the technical capacity. For the avoidance of doubt, construction works shall not include cost of land, supply of goods or equipment except when such goods or equipment form part of a turn-key construction contract/ EPC contract for the project. Further, in cases where different individual contracts are signed between same entities for the same project, the cumulative payments received under such individual contracts shall be considered for meeting the qualification requirement.

The Technically Evaluated Entity may be the Bidding Company or the Lead Member of a Consortium or an Affiliate or Parent of such Bidding Company or the Lead Member, as the case may be.

Bidders shall furnish documentary evidence duly certified by authorized signatory of the Bidder who has been issued Power of Attorney in support of their technical capability as defined in Clause 2.1.2 of this RFP.

2.1.3 **Financial requirement to be met by the Bidding Company/Bidding Consortium**

2.1.3.1 The Bidder must fulfill following financial requirements:

A. Networth:

Networth should be not less than **Rs.1,634 Crore (Rupees One Thousand Six Hundred Thirty Four Crore Only)** or equivalent USD (calculated as per provisions in Clause 3.4.1) computed as the Networth based on unconsolidated audited annual accounts (refer to Note below) of any of the last three (3) financial years as provided in Clause 2.2.3, immediately preceding the Bid Deadline. Also, the Networth of any of the last three (3) financial years should not be negative.

Note: Audited consolidated annual accounts of the Bidder may be used for the purpose of financial criteria provided the Bidder has at least 26% equity in each company whose accounts are merged in the audited consolidated accounts and provided further that the financial capability of such companies (of which accounts are being merged in the consolidated accounts) shall not be considered again for the purpose of evaluation of the Technical Bid. Bidders shall furnish prescribed Annexure 7(A) duly certified by authorized signatory of the Bidder who has been issued Power of Attorney and the Statutory Auditor and separate computation sheet for Networth duly certified by Statutory Auditor in support of their financial capability as defined in Clause 2.1.3 of this RFP.

2.1.3.2 The Net worth shall be computed in the following manner by the Bidder:

A. Networth

=	Equity share capital
Add:	Reserves
Subtract:	Revaluation Reserves
Subtract:	Intangible Assets
Subtract:	Miscellaneous expenditures to the extent not written off

and carry forward losses

2.1.3.3 If the Technical Bid is submitted by a Bidding Consortium the financial requirement shall be met individually and collectively by all the Members in the Bidding Consortium. The financial requirement to be met by each Member of the Bidding Consortium shall be computed in proportion to the equity commitment made by each of them for investment in the Project.

2.1.4 The Bidder may seek qualification on the basis of technical and financial capability of its Parent and/ or its Affiliate(s) for the purpose of meeting the Qualification Requirements. However, in the case of the Bidder being a Consortium, the Lead Member has to meet the technical requirement on its own or by seeking the technical capability of its Parent and/or its Affiliate(s). Authorization for use of such technical or financial capability shall have to be provided from its Parent and/or Affiliate(s) as per **Annexure 9.** The technical and financial capability of a particular company/ particular project, including its Parents and/or Affiliates, shall not be used directly or indirectly by more than one Bidder/ Member of a Bidding Consortium/ Bidding Company. However, development and construction experience of a particular project may be used by more than one company.

The determination of the relationship of Parent or Affiliate with the Bidding Company or with the Member of the Bidding Consortium, including the Lead Member, shall be on the date at the most seven (7) days prior to the last date of submission of the Bid. Documentary evidence to establish such relationship shall be furnished by the Bidder along with the Technical Bid.

If the Technically Evaluated Entity and/or Financially Evaluated Entity is an entity other than the Bidding Company or a Member in a Bidding Consortium, the Bidding Company or Member relying on such Technically Evaluated Entity and/or Financially Evaluated Entity will have to submit a legally binding undertaking supported by a board resolution from the Technically Evaluated Entity and/or Financially Evaluated Entity or its Ultimate Parent Company, that all the equity investment obligations of the Bidding Company or the Member of the Consortium shall be deemed to be equity investment obligations of the Technically Evaluated Entity and/or Financially Evaluated Entity or its Ultimate Parent Company, and in the event of any default the same shall be met by such evaluated entity or by or the Ultimate Parent Company. The Bidding Company or the Consortium Member shall have to provide information and documents relating to its relationship with such Technically Evaluated Entity and/or Financially Evaluated Entity including details about the equity shareholding between them as per Annexure 7(C).

2.1.5 A Bidder shall submit only one Bid in the same bidding process, either individually as Bidding Company or as a Member of a Bidding Consortium (including the Lead Member). It is further clarified that any of the Parent/ Affiliate/Ultimate Parent of the Bidder/ Member in a Bidding Consortium shall not separately participate directly or indirectly in the same bidding process. Further, if any Bidder is having a Conflict of Interest with other Bidders participating in the same bidding process, the Bids of all such Bidders shall be rejected.

2.1.6 Notwithstanding anything stated above, BPC reserves the right to verify the authenticity of the documents submitted for meeting the Qualification Requirements and request for any additional information and documents. BPC reserves the right at its sole discretion to contact the Bidder's bank and project references and verify the Bidder's information and documents for the purpose of bid evaluation.

2.1.7 The Qualified Bidder(s) will be required to continue to maintain compliance with the Qualification Requirements throughout the bidding process and till execution of the Transmission Service Agreement. Where the Technically Evaluated Entity and/or the Financially Evaluated Entity is not the Bidding Company or a Member in a Bidding Consortium, as the case

may be, the Bidding Company or Member shall continue to be an Affiliate of the Technically Evaluated Entity and/or Financially Evaluated Entity till the execution of the Transmission Service Agreement. Failure to comply with the aforesaid provisions shall make the Bid liable for rejection at any stage.

2.1.8 The Selected Bidder will be required to continue to maintain compliance with the Qualification Requirements till the COD of the Project. Where the Technically Evaluated Entity and/or the Financially Evaluated Entity is not the Bidding Company or a Member in a Bidding Consortium, as the case may be, the Bidding Company or Member shall continue to be an Affiliate of the Technically Evaluated Entity and/or Financially Evaluated Entity till the COD of the Project. Failure to comply with the aforesaid provisions shall be dealt as per provisions of Transmission Service Agreement.

2.1.9 On the Bid Deadline, for the Bidder to be eligible to participate in the bidding process:

a. the Bidder & any of its Affiliate including any Consortium Member & any of its Affiliate, their directors or key personnel should not have been barred or included in the blacklist by any government agency or authority in India, the government of the jurisdiction of the Bidder or Members where they are incorporated or the jurisdiction of their principal place of business, any international financial institution such as the World Bank Group, Asian Development Bank, African Development Bank, Inter-American Development Bank, Asian Infrastructure Investment Bank etc. or the United Nations or any of its agencies; or

b. the Bidder & any of its Affiliate including any Consortium Member & any of its Affiliate or their directors should not have been convicted of any offence in India or abroad.

In case any investigation is pending against the Bidder, including any Consortium Member or Affiliate, or CEO or any of the directors/ manager/key managerial personnel of the Bidder /Consortium /Member or their Affiliates, full details of such investigation including the name of the investigating agency, the charge/offence for which the investigation has been launched, name and designation of persons against whom the investigation has been launched and other relevant information should be disclosed while submitting the Bid.

The Bidders shall confirm the above though a notarized affidavit as per Annexure 22.

2.2 Submission of Bid by the Bidder

2.2.1 The information and documents in Technical Bid will be submitted by the Bidder as per the formats specified in Section – 4 (Formats for RFP) of this document.

2.2.2 Strict adherence to the formats wherever specified, is required. Wherever, information has been sought in specified formats, the Bidder shall refrain from referring to brochures/ pamphlets. Non-adherence to formats and/ or submission of incomplete information may be a ground for declaring the Technical Bid as non-responsive. Each format has to be duly signed and stamped by the authorized signatory of Bidder.

2.2.3 The Technical Bid shall contain unconsolidated/consolidated audited annual accounts (consisting of unabridged Balance Sheet, Profit and Loss Account, profit appropriation account, Auditors Report, etc.), as the case may be, of Bidding Company or each Member in Consortium including Lead Member or the Financially Evaluated Entity for the last three (3) financial years immediately preceding the last date for submission of Bid for the purpose of calculation of Networth.

In case the annual accounts for the financial year immediately preceding the Bid Deadline is not audited, the Bidder shall give declaration in this regard duly certified by its statutory auditor. In

such a case, the Bidder shall provide the audited annual accounts for the three (3) financial years preceding the financial year as above for which the annual accounts have not been audited.

2.2.4 Bid submitted by a Bidding Consortium:

2.2.4.1 The Technical Bid shall contain a legally enforceable Consortium Agreement entered amongst the Members in the Bidding Consortium, designating one of the Members to be the Lead Member (as per Annexure 6). There shall be only one Lead Member which shall continue to hold twenty six percent (26%) equity in the TSP and cannot be changed upto one (1) year from the Commercial Operation Date (COD) of the Project. Each Member in Bidding Consortium shall duly sign the Consortium Agreement making it liable for raising the required funds for its respective equity investment commitment as specified in the Consortium Agreement. In absence of Consortium Agreement, the Technical Bid will not be considered for evaluation and will be rejected.

Provided that the Lead Member of the Bidding Consortium will be required to be liable to the extent of 100% of the total proposed commitment of equity investment of the Bidding Consortium i.e. for both its own equity contribution as well as the equity contribution of other Members.

Provided further that the Consortium Agreement shall not be amended without the explicit approval of the BPC.

The Lead Member of the Consortium will be the single point of contact for the purposes of the bid process before the date of signing of Share Purchase Agreement. Settlement of any dispute amongst the Consortium Members shall not be the responsibility of the BPC and/or the CTU and the BPC and/or the CTU shall not bear any liability whatsoever on this account.

2.2.4.2 The Lead Member should designate at the most two persons to represent the Consortium in its dealings with the BPC. The person(s) designated by the Lead Member should be authorized through a Power of Attorney (as per Annexure 3) to perform all tasks including, but not limited to providing information, responding to enquiries, signing of Technical Bid on behalf of the Consortium, etc. The Bidding Consortium shall provide board resolutions from their respective Boards for committing their respective portion of equity requirement for the Project. Additionally, the Lead member shall provide a Board resolution committing to make good any shortfall in the equity for the project, in case of any member not meeting its equity commitment.

2.2.4.3 The Technical Bid should also contain signed Letter of Consent (as per **Annexure 2**) from each Member in Consortium confirming that the entire Technical and Financial Bids has been reviewed and each element of the Technical and Financial Bids is agreed to by them including investment commitment for the Project.

In addition, the Technical Bid should also contain Board Resolution from each Member of the Consortium other than the Lead Member in favour of their respective authorized representatives for executing the POA, Consortium Agreement and signing of the requisite formats.

2.2.5 Bid submitted by a Bidding Company

2.2.5.1 The Bidding Company should designate at the most two persons to represent the Bidding Company in its dealings with BPC. The person(s) should be authorized to perform all tasks including, but not limited to providing information, responding to enquiries, signing of Technical and Financial Bids etc. The Bidding Company should submit, along with Technical Bid, a Power of Attorney (as per Annexure 3), authorizing the signatory of the Technical and Financial Bids. The

Bidding Company shall submit the board resolution committing 100% of equity requirement for the Project, in the Technical Bid.

2.3 Clarifications & Pre-Bid Meeting

2.3.1 The Bidders may seek clarifications or suggest amendments to the RFP by sending an email to the BPC at the email id indicated in Clause 2.14 within the date and time mentioned in Clause 2.7.2. For any such clarifications or amendments, the Bidders should adhere to the format as per **Annexure – 19**.

2.3.2 Only those Bidders or their authorized representatives, who have purchased the RFP documents, are invited to attend the pre-bid meeting(s), which will take place on date as specified in Clause 2.7.2, or any such other date as notified by the BPC. The time and address of this would be intimated later.

2.3.3 The purpose of the pre-bid meeting will be to clarify any issues regarding the RFP, including in particular, issues raised in writing by the Bidders as per the provisions of Clause 2.3.1.

2.3.4 Non-attendance at the pre-bid meeting will not be a cause for disqualification of a Bidder.

2.3.5 The BPC is not under any obligation to entertain / respond to suggestions made or to incorporate modifications sought for.

2.3.6 In case Bidders need any further clarifications not involving any amendments in respect of final RFP, they should ensure that request for such clarification is submitted through e-mail to the BPC at least ten (10) days prior to the Bid Deadline as mentioned in Clause 2.7.1. The BPC may issue clarifications only, as per its sole discretion, which is considered reasonable by it. Any such clarification issued shall be sent to all the Bidders to whom the RFP has been issued. Clarifications sought after this date shall not be considered in any manner and shall be deemed not to have been received. There shall be no extension in Bid Deadline on account of clarifications sought as per this clause 2.3.6.

2.4 Amendment of RFP

2.4.1 At any time before the timeline mentioned in Clause 2.7.1, the BPC may, for any reason, whether at its own initiative or in response to clarifications requested by any Bidder modify or amend the RFP, including the timelines specified in Clause 2.7.2 by issuance of addendum/modification/errata and/or revised document. Such document shall be notified in writing through a letter or fax or e-mail to all the entities to whom the RFP has been issued and shall be binding on them. In order to ensure that Bidders have reasonable time to take the modification into account in preparing their Bid, or for any other reasons, BPC may at its discretion, extend the due date for submission of Bid. Late receipt of any addendum/modification/errata and/or revised document will not relieve the Bidder from being bound by that modification.

2.4.2 All modifications shall become part of the terms and conditions of this RFP. No interpretation, revision or communication regarding this RFP is valid, unless made in writing.

2.4.3 The amendment to the RFP shall be notified to all the Bidders through the electronic bidding platform and shall be binding on them.

2.5 The Bidding Process

The entire bidding process shall be conducted on electronic bidding platform created by **MSTC Limited**. The Bid shall comprise of the Technical Bid and the Financial Bid. The Bidders shall submit the Technical Bid & Financial Bid through the electronic bidding platform. In addition to the online submission, the Bidder with lowest Final Offer will be required to submit original hard copies of Annexure 3, Annexure 4 (if applicable), Annexure 6 (if applicable) and Annexure 14 before issuance of LoI. There shall be no physical submission of the Financial Bid.

Evaluation of Technical Bid will be carried out considering the information and documents furnished by the Bidders as required under this RFP. This step would involve responsiveness check, technical and financial evaluation of the details/ documents furnished by the Bidding Company / Bidding Consortium in support of meeting the Qualification Requirements. Bidders meeting the Qualification Requirements, subject to evaluation as specified in Clause 3.2 to 3.4 shall be declared as "Qualified Bidders" and eligible for opening of Initial Offer. The BPC shall also upload the list of all Qualified Bidders and Non-Qualified Bidders on the bidding portal along with the reasons for non-qualification. Also, the Financial Bids of Qualified Bidders shall be opened after at least 24 hours from the date of declaration of the Technically Qualified Bidders.

The Financial Bid will comprise of two rounds. In the first round the Initial Offer (submitted online along with the Technical Bids) of the responsive bids would be opened and Quoted Transmission Charges of Initial Offer shall be ranked on the basis of ascending order for determination of the Qualified Bidders as provided in Section-III of RFP. The Qualified Bidders, in the first fifty per cent of the ranking (with any fraction rounded off to higher integer) or four Qualified Bidders, whichever is higher, shall qualify for participating in the electronic reverse auction stage and submit their Final Offer.

Provided however, in case only one Bidder remains after the evaluation of Technical Bid as per Clause 3.2, 3.3 and Clause 3.4, the Initial Offer of such Bidder shall not be opened and the matter shall be referred to the Government.

Provided that in the event the number of qualified Technical Bids is between two and four, then each of the qualified Bidder shall be considered as "Qualified Bidders".

Provided that in the event of identical Quoted Transmission Charges discovered from the Initial Offer having been submitted by one or more Bidders, all such Bidders shall be assigned the same rank for the purposes of determination of Qualified Bidders. In such cases, all the Qualified Bidders who share the same rank till 50% of the rank (with any fraction rounded off to higher integer) determined above, shall qualify to participate in the electronic e-reverse auction stage. In case 50% of the ranks (with any fraction rounded off to higher integer) is having less than 4 (four) Bidders and the rank of the fourth (4th) Bidder is shared by more than one (1) Bidder, then all such Bidders who share the rank of the fourth (4th) Bidder shall qualify to participate in the electronic reverse auction.

The applicable ceiling for electronic reverse bidding shall be the lowest Quoted Transmission Charges discovered from the Initial Offer received from the Qualified Bidders. The Qualified Bidders shall be permitted to place their Final Offer on the electronic bidding platform, which is lower than zero point two five (0.25) % of the prevailing lowest Quoted Transmission Charges.

The initial period for conducting the e-reverse bidding should be 2 hours which will be extended by 30 minutes from the last received bid time, if the bid is received during the last 30 minutes of

the scheduled or extended bid time. Subsequently, it will be extended again by 30 minutes from the latest received bid time.

The technical details with respect to access to such electronic platform are provided **in Annexure-A** (Technical Details with respect to electronic reverse auction).

In case of any technical clarification regarding access to the electronic reverse auction platform or conduct of the auction process, the Bidders may contact MSTC directly at the address provided in **Annexure-A.**

2.5.1 Bid Formats

The Bids in response to this RFP will be submitted online through the electronic bidding platform by the Bidders in the manner provided in Clause 2.9. The Bids shall comprise of the following:

2.5.2 Technical Bid comprising of:

1. Covering Letter (as per prescribed format enclosed as **Annexure 1**);

2. Letter of Consent from Consortium Members in **Annexure 2;**

3. Power of attorney issued by the Bidding Company or the Lead Member of the Consortium, as the case may be, in favour of the person signing the Bid, in the format attached hereto as **Annexure 3**.

   Additionally, in case of a Bidding Consortium, the power of attorney in favour of the Lead Member issued by the other Members of the Consortium shall be provided in as per format attached hereto as **Annexure 4**. Further, the Lead Member shall furnish Board resolution(s) from each Member of the Consortium other than the Lead Member in favour of their respective authorized representatives for executing the POA and signing of the requisite formats.

   Provided that in the event the Bidding Company or the Lead Member of the Consortium or any Member of the Bidding Consortium, as the case may be, is a foreign entity, it may issue Board resolutions in place of power of attorney for the purpose of fulfilling these requirements.

4. Bidder's composition and ownership structure in **Annexure 5**

5. Format for Authorization submitted in Non-Judicial stamp paper duly notarized as per **Annexure 5** from the Bidding Company / each Member of the Consortium authorizing the BPC to seek reference from their respective bankers & others.

6. In case of Bidding Consortium, the Consortium Agreement shall be provided in as per format attached hereto as **Annexure 6**

7. Format of Qualification Requirement (**Annexures 7A, 7B, 7C and 7D)**

8. Bidders Undertakings and details of equity investment in Project (as per prescribed formats 1 and 2 of **Annexure 8**);

9. Authorization from Parent / Affiliate of Bidding Company / Member of Bidding Consortium whose technical / financial capability has been used by the Bidding Company / Member of Bidding Consortium **(Annexure 9)**.

10. Undertaking from the Technically / Financially Evaluated Entity(ies) **OR** Undertaking from the Ultimate Parent Company, for total equity investment commitment, in the prescribed format in **Annexure – 10**, to meet any shortfall in the equity investment by the Selected Bidder in the **SPV (UNDER INCORPORATION)**.

    Note: The effective Equity holding of the Selected Bidder in the **SPV (UNDER INCORPORATION)**, as specified in Clause 2.5.8.1 shall be computed as per the provisions of Clause 2.5.8.3 of this RFP.

    Provided further, in case the Bidding Company or Member of a Consortium, (as the case may be) holds at least twenty six percent (26%) equity in such Technically/ Financially Evaluated Entities, whose credentials have been considered for the purpose of meeting the Qualification Requirements as per the RFP, no such Undertaking shall be required from the Technically / Financially Evaluated Entities.

11. Board resolutions, as per prescribed formats enclosed as **Annexure – 11**, duly certified by the Company Secretary or any Whole-time Director / Manager (supported by a specific Board Resolution), as applicable to the Bidder and mentioned hereunder,

    (a) Board resolution from the Bidding Company (and any investing Affiliate / Parent Company / Ultimate Parent Company) committing one hundred percent (100%) in aggregate of the equity requirement for the Project - Format-1 of **Annexure 11**;

    (b) Board resolutions from each of the Consortium Member of the Bidding Consortium (and any investing Affiliate / Parent Company / Ultimate Parent Company) together committing to one hundred percent (100%) in aggregate of equity requirement for the Project, in case Bidder is a Bidding Consortium - Format-1 of **Annexure 11**;

    (c) In either of the cases as in (a) or (b) above as applicable, Board resolutions as per Format 2 of **Annexure 11** for total equity investment commitment from the Technically / Financially Evaluated Entity(ies) whose technical / financial credentials had been considered for the purpose of meeting Qualification Requirements as per the RFP

    OR

    Board resolutions as per Format 2 of **Annexure 11** from the Parent Company or the Ultimate Parent Company for total equity investment commitment.

    Provided that such Board resolutions, as specified in (a) or (b) or (c) above, in case of a foreign entity, shall be supported by an unqualified opinion issued by an independent legal counsel practicing in the relevant country, stating that the Board resolutions are in compliance with the applicable laws of the respective jurisdictions of the issuing company and the authorizations granted therein are true and valid.

    For clarity sake, illustrations identifying which Board Resolution shall be applicable in typical cases are provided in **Annexure 11A**.

12. Format for Illustration of Affiliates at the most seven (7) days prior to Bid Deadline, duly certified by Company Secretary and supported by documentary evidence **(Annexure 12)**.

Certified copy of the Register of Members / Demat Account Statement, Share Certificate, Annual Return filed with ROC etc. submitted as documentary evidence along with **Annexure 12.**

13. Disclosure as per **Annexure 13** regarding participation of any related companies in this bidding process.

14. Bid Bond, as per the prescribed format at **Annexure 14.**

15. Checklist for Technical Bid submission requirements as per **Annexure 16**.

16. Last three (3) financial years' unconsolidated / consolidated audited annual accounts / statements, as the case may be, of the Financially Evaluated Entity / Technical Evaluated Entity.

17. Unconsolidated audited annual accounts of both the TEE and the Bidding Company/Lead member, as applicable, for the financial years in which financial closure was achieved and the financial year in which the said project was completed / commissioned.

18. Copy of the Memorandum and Articles of Association and certificate of incorporation or other organizational document (as applicable), including their amendments, certified by the Company Secretary of Bidding Company or each Member in case of a Consortium including Lead Member.

19. For each project listed in Annexure 7(D), certified true copy of the certificates of final acceptance and / or certificates of good operating performance duly issued by owners or clients for the project, duly signed by authorized signatory.

In addition to the online submission of above formats through the electronic platform, the Bidder with lowest Final Offer will be required to submit original hard copies of Annexure 3, Annexure 4 (if applicable), Annexure 6 (if applicable) and Annexure 14 before issuance of LoI. In case, there is a discrepancy between the online submission and physical documents, the bid would be out rightly rejected and the bidder shall be construed to have engaged in the fraudulent practice as defined in Clause 2.19.3 with consequences as mentioned in Clause 2.19.2.

2.5.3 Financial Bid (as per prescribed format at Annexure-21)

Financial Bid shall comprise of: (i) the Initial Offer; and (ii) the Final Offer. The Initial Offer is required to be submitted along with the Technical Bid. It is hereby clarified that the Financial Bid will comprise of two rounds. In the first round the Initial Offer of the responsive bids would be opened and Quoted Transmission Charges of Initial Offer shall be ranked on the basis of ascending order for determination of the Qualified Bidders as provided in Section-III of RFP.

In accordance with clause 2.5 of this RFP, the qualified Bidders shall be eligible to participate in the electronic reverse auction and submit their Final Offer.

The applicable ceiling for electronic reverse bidding shall be the lowest Quoted Transmission Charges discovered from the Initial Offer received from the Qualified Bidders. The Qualified Bidders shall be permitted to place their Final Offer on the electronic bidding platform, which is lower than zero point two five (0.25) % of the prevailing lowest Quoted Transmission Charges.

The initial period for conducting the e-reverse bidding should be 2 hours which will be extended by 30 minutes from the last received bid time, if the bid is received during the last 30 minutes of

the scheduled or extended bid time. Subsequently, it will be extended again by 30 minutes from the latest received bid time.

The Bidders shall inter-alia take into account the following while preparing and submitting the Initial Offer and Final Offer of Financial Bid:-

a. The Bidders shall quote single annual Quoted Transmission Charges for a period of 35 years commencing from the Scheduled COD of the Project.

b. The Quoted Transmission Charges as per the format at Annexure-21 shall be inclusive of all charges and no exclusions shall be allowed. The Bidders shall take into account all costs including capital and operating, statutory taxes, duties, levies. Availability of the inputs necessary for operation and maintenance of the Project should be ensured by the TSP at the Project site and all costs involved in procuring the inputs (including statutory taxes, duties, levies thereof) at the Project site must be included in the Quoted Transmission Charges.

c. **Annexure 21** duly digitally signed by authorized signatory.

2.5.4 Wherever information has been sought in specified formats, the Bidders shall fill in the details as per the prescribed formats and shall refrain from referring to any other document for providing any information required in the prescribed format.

2.5.5 Transmission Charges

2.5.5.1 The Transmission Charges shall be specified in the Transmission Service Agreement and shall be payable to the TSP in Indian Rupees only. The Bidders shall quote single Transmission Charges as per the format at **Annexure – 21**.

2.5.5.2 The Transmission Charges of the Selected Bidder shall be inserted in Schedule 5 of the Transmission Service Agreement.

2.5.6 Bidders may note that:

a) All the information and documents in Bid shall be submitted in English language only.

b) Bidders shall mention the name, designation, telephone number, fax number, email address of the authorized signatory and complete address of the Bidder in the covering letter.

c) All pages of the Bid submitted shall be initialed and stamped by the authorized signatory on behalf of the Bidder.

d) A Bidder shall submit only one Bid in the same bidding process, either individually as Bidding Company or as a Member of a Bidding Consortium.

e) The technical and financial capability of a particular company / particular project (Parent and/ or Affiliate) shall not be used directly or indirectly by more than one Bidder/ Member of a Bidding Consortium including Lead Member / Bidding Company.

f) This Request for Proposal (RFP) document is not transferable. The RFP document and the information contained therein is for the use only by the Bidder to whom it is issued. It may not be copied or distributed by the recipient to third parties (other than in confidence to the recipient's professional advisors). In the event that the recipient does not continue with its involvement in the Project, this RFP document must be kept confidential.

g) Though adequate care has been taken while preparing this RFP document, the Bidder shall satisfy himself that the document is complete in all respects. Intimation of any discrepancy shall be given to the BPC immediately. If no intimation is received from any Bidder within ten (10) days from the date of issue of RFP document, it shall be considered that the RFP document is complete in all respects and has been received by the Bidder.

h) Bids submitted by the Bidder and opened on scheduled date and time as stipulated in this RFP shall become the property of the BPC and BPC shall have no obligation to return the same to the Bidder.

i) If any Bidder conceals any material information or makes a wrong statement or misrepresents facts or makes a misleading statement in its Bid, in any manner whatsoever, the BPC reserves the right to reject such Bid or cancel the Letter of Intent, if issued. If such event is discovered after the Effective Date, consequences specified in Transmission Service Agreement shall apply.

j) If for any reason the Bid of the Bidder with the lowest Quoted Transmission Charges is not selected or Letter of Intent issued to such Selected Bidder is cancelled or such Bidder withdraws its Bids, the BPC may :-

   i. Invite all the remaining Bidders to revalidate or extend their respective Bid Security, as necessary, and match the Bid of the Bidder with the lowest Quoted Transmission Charges (the "second round of bidding") with following cases:

      - If in the second round of bidding, only one Bidder matches the Bid of the Bidder with lowest Quoted Transmission Charges, it shall be the Selected Bidder.

      - If two or more Bidders match the Bid of the Bidder with the lowest Quoted Transmission Charges in the second round of bidding, then the Bidder whose Quoted Transmission Charges was lower as compared to other Bidder(s) in the first round of bidding shall be the Selected Bidder. For example, if the third and fifth lowest Bidders in the first round of bidding offer to match the Bid of the Bidder with lowest Quoted Transmission Charges in the second round of bidding, the said third lowest Bidder shall be the Successful Bidder.

      - In the event that no Bidder offers to match the Bid of the Bidder with the lowest Quoted Transmission Charges in the second round of bidding, the BPC may, in its discretion, invite fresh Bids (the "third round of bidding") from all Bidders except the Bidder which quoted the lowest Quoted Transmission Charges in the first round of bidding. In case the Bidders are invited for the third round of bidding to revalidate or extend their Bid Security, as necessary, and offer fresh Bids, they shall be eligible for submission of fresh Bids provided, however, that in such third round of bidding only such Bids shall be eligible for consideration which are lower than the Quoted Transmission Charges of the second lowest Bidder in the first round of bidding; or;

   ii. Annul the bid process; or

   iii. Take any such measure as may be deemed fit in the sole discretion of the BPC[1]

k) The BPC may, at its sole discretion, ask for additional information / document and/or seek clarifications from a Bidder after the Bid Deadline, inter alia, for the purposes of removal of inconsistencies or infirmities in its Bid. However, no change in the substance of the Quoted

[1] **BPC shall record reasons for the same.**

Transmission Charges shall be sought or permitted by the BPC.

l) Non submission and/or submission of incomplete data/ information required under the provisions of RFP shall not be construed as waiver on the part of BPC of the obligation of the Bidder to furnish the said data / information unless the waiver is in writing.

m) Bidders shall familiarize itself with the procedures and time frames required to obtain all Consents, Clearances and Permits.

n) All Bidders are required to ensure compliance with the standards and codes mentioned in Clause 1.6.1.2.

o) BPC reserves the right to reject all Bids and/or annul the process of tariff based competitive bidding for selection of Bidder as TSP to execute the Project without assigning any reason. BPC shall not bear any liability, whatsoever, in this regard.

p) Foreign companies submitting the Bid are required to follow the applicable law in their country for execution of POA, Consortium Agreement and affixation of Common Seal (wherever required) and in such cases, their Bid should be supported by an unqualified opinion issued by an independent legal counsel practicing in the relevant country, stating that execution of such POA, Consortium Agreement and the authorizations granted therein are true and valid. Foreign companies executing POA outside India shall necessarily pay the adequate stamp charges in India as per the provisions of Stamp Act.

2.5.7 Bidders to inform themselves fully

2.5.7.1. The Bidders shall make independent enquiry and satisfy themselves with respect to all the required information, inputs, conditions and circumstances and factors that may have any effect on his Bid. Once the Bidders have submitted their Bids, the Bidders shall be deemed to have inspected and examined the site conditions (including but not limited to its surroundings, its geological condition and the adequacy of transport facilities to the site), the laws and regulations in force in India, the transportation facilities available in India, the grid conditions, the adequacy and conditions of roads, bridges, railway sidings, ports, etc. for unloading and/or transporting heavy pieces of material and has based its design, equipment size and fixed its price taking into account all such relevant conditions and also the risks, contingencies and other circumstances which may influence or affect the transmission of power. Accordingly, each Bidder acknowledges that, on being selected as Successful Bidder and on acquisition of one hundred percent (100%) of the equity shares of the **SPV (UNDER INCORPORATION)**, the TSP shall not be relieved from any of its obligations under the RFP Project Documents nor shall the TSP be entitled to any extension in Scheduled COD mentioned in this RFP or financial compensation for any reason whatsoever.

2.5.7.2. In their own interest, the Bidders are requested to familiarize themselves with all relevant laws of India, including without limitation, the Electricity Act 2003, the Income Tax Act 1961, the Companies Act, 1956 / Companies Act, 2013 (as the case may be), Environment Protection Act 1986 and Forest (Conservation) Act, 1980, the Customs Act, the Foreign Exchange Management Act, Land Acquisition Act, 1894, the Indian Telegraph Act 1885, Labour & Employment Laws of India, [Insurance Act] the regulations/standards framed by the Commissions and CEA, all other related acts, laws, rules and regulations prevalent in India, as amended from time to time.

In addition to the above, the Bidders are required to familiarize themselves with all relevant technical codes and standards, including but not limited to the Grid Code / State Grid Code, Central Electricity Authority (Installation and Operations of Meters) Regulations, 2006, Central Electricity Authority (Technical Standards for Connectivity to the Grid) Regulations, 2007,

Central Electricity Regulatory Commission Grant of Connectivity, Long-term Access and Medium - Term Open Access in Inter-State Transmission and related matters) Regulations, 2009, Central Electricity Authority (Technical Standards for construction of Electrical Plants and Electric Lines) Regulation, 2010, Central Electricity Authority (Technical Standards for Communication System in Power System Operation) Regulations, 2020, Central Electricity Regulatory Commission (Sharing of Inter-State Transmission Charges and Losses) Regulations, 2020 and other relevant Rules/ Regulations/ Guidelines issued by the Central Government, the CERC and the CEA and amendments thereof.

The BPC shall not entertain any request for clarifications from the Bidders regarding the above laws / acts / rules / regulations / standards. Non-awareness of the same shall not be a reason for the Bidder to request for extension in Bid Deadline. The Bidders undertake and agree that, before submission of their Bid, all such factors as generally brought out above, have been fully investigated and considered while submitting their Bids.

2.5.7.3. The Survey Report has been prepared in good faith, and on best endeavor basis. Neither BPC & Nodal Agency nor their employees or advisors/consultants make any representation or warranty, express or implied, or accept any responsibility or liability, whatsoever, in respect of any statements or omissions made in the Survey Report, or the accuracy, completeness or reliability of information contained therein, and shall incur no liability under any law, statute, rules or regulations as to the accuracy, reliability or completeness of such Survey Report, even if any loss or damage is caused to the Bidders by any act or omission on their part.

2.5.7.4. Bidders shall make best efforts and carry out its own due diligence upon survey report provided by BPC and shall consider all possible techno-commercial factors before submission of Bid. Bidders may also visit the route of the Transmission Lines associated with the Project and the surrounding areas and obtain / verify all information which they deem fit and necessary for the preparation of their Bid. Bidders may also carry out required surveys and field investigation for submission of their Bid. Bidders may also opt for any other route and is not bound to follow the route suggested in survey report provided by BPC.

2.5.7.5. Failure to investigate, examine and to inspect site or subsurface conditions fully shall not be grounds for a Bidder to alter its Bid after the Bid Deadline nor shall it relieve a Bidder from any responsibility for appropriately eliminating the difficulty or costs of successfully completing the Project.

2.5.7.6. The Selected Bidder shall obtain all necessary Consents, Clearances and Permits as required. The Bidders shall familiarize itself with the procedures and time frame required to obtain such Consents, Clearances and Permits.

2.5.7.7. The technical requirements of integrated grid operation are specified in the Indian Electricity Grid Code (IEGC). The Bidders should particularly acquaint themselves with the requirements of connection conditions, operating code for regional grids, scheduling and dispatch instructions/codes, etc. The Bidders are also advised to fully familiarize themselves with the real time grid conditions in the country. Information regarding grid parameters such as voltage and frequency is available on the websites of Regional / State Load Dispatch Centres.

2.5.8 Minimum Equity holding/Equity Lock-in

2.5.8.1 (a) The aggregate equity share holding of the Selected Bidder, in the issued and paid up equity share capital of **SPV (UNDER INCORPORATION)** shall not be less than Fifty one percent (51%) up to a period of (1) one year after COD of the Project;

(b) In case the Selected Bidder is a Bidding Consortium, then any Member (other than the Lead Member) of such Bidding Consortium shall be allowed to divest its equity as long as the other remaining Members (which shall always include the Lead Member) hold the minimum equity specified in (a) above.

(c) If equity is held by the Affiliates, Parent Company or Ultimate Parent Company, then subject to the second proviso of this Clause 2.5.8.1 (c), such Affiliate, Parent Company or Ultimate Parent Company shall be permitted to transfer its shareholding in **SPV (UNDER INCORPORATION)** to another Affiliate or to the Parent Company / Ultimate Parent Company. If any such shareholding entity, qualifying as an Affiliate / Parent Company / Ultimate Parent Company, is likely to cease to meet the criteria to qualify as an Affiliate / Parent Company / Ultimate Parent Company, the shares held by such entity shall be transferred to another Affiliate / Parent Company / Ultimate Parent Company.

Provided that in case the Lead Member or Bidding Company is holding equity through Affiliate/s, Ultimate Parent Company or Parent Company, such restriction shall apply to such entities.

Provided further, that the aggregate equity share holding of the Bidding Consortium or a Bidding Company in the issued and paid up equity share capital of **SPV (UNDER INCORPORATION)** shall not be less than fifty one percent (51%) up to a period of one (1) year after COD of the Project and the lead Member of the Consortium shall have the equity share holding not less than twenty six percent (26%). In case the Selected Bidder is a Bidding Consortium, then any Member (other than the Lead Member) of such Bidding Consortium shall be allowed to divest its equity as long as the other remaining Members (which shall always include the Lead Member) hold the minimum equity specified in (a) above.

(d) All transfer(s) of shareholding of **SPV (UNDER INCORPORATION)** by any of the entities referred to above, shall be after prior written intimation to the Nodal Agency.

2.5.8.2 The Selected Bidder may invest in the equity share capital of **SPV (UNDER INCORPORATION)** through its Affiliate(s) or Ultimate Parent Company or Parent Company. Details of such investment will have to be specified in the Technical Bid as per Format 2 of Annexure 8 of the RFP. If the Selected Bidder so invests through any Affiliate(s) or Ultimate Parent Company or Parent Company, the Selected Bidder shall be liable to ensure that minimum equity holding/lock-in limits specified in Clause 2.5.8.1 and as computed as per the provisions of Clause 2.5.8.3 are still maintained.

2.5.8.3 For computation of effective Equity holding, the Equity holding of the Selected Bidder or its Ultimate Parent Company in such Affiliate(s) or Parent Company and the equity holding of such Affiliate (s) or Ultimate Parent Company in **SPV (UNDER INCORPORATION)** shall be computed in accordance with the example given below:

If the Parent Company or the Ultimate Parent Company of the Selected Bidder A directly holds thirty percent (30%) of the equity in **SPV (UNDER INCORPORATION)** then holding of Selected Bidder A in **SPV (UNDER INCORPORATION)** shall be thirty percent (30%);

If Selected Bidder A holds thirty percent (30%) equity of the Affiliate and the Affiliate holds fifty percent (50%) equity in **SPV (UNDER INCORPORATION)**, then for the purposes of ascertaining the minimum equity/equity lock-in requirements specified above, the effective holding of Bidder A in **SPV (UNDER INCORPORATION)** shall be fifteen percent (15%), (i.e., 30%* 50%);

2.5.8.4 The provisions as contained in this Clause 2.5.8 and Article 19.1 of the Transmission Service Agreement shall override the terms of the Consortium Agreement submitted by the Bidder as part of the RFP.

2.6 Project Schedule

2.6.1. All Elements of the Project are required to be commissioned progressively as per the schedule given in the following table;

S. No.	Name of the Transmission Element	Scheduled COD as per Gazette Notification	% of Quoted Transmission Charges recoverable on Scheduled COD of the Element of the Project	Element(s) which are pre-required for declaring the commercia operation (COD) of the respective Element
1.	Establishment of 4x1500 MVA, 765/400 kV and 5x500 MVA, 400/220 kV Krishnagiri Pooling Station near Kodumur in Kurnool district along with 2x330 MVAr (765 kV) bus reactors at Krishnagiri PS with provision of two (2) sections of 4500 MVA each at 400 kV level	30 months	100	Element at S. No. 2, 3, 4, 5, 6 & 7
2.	± 300 MVAR STATCOM at Krishnagiri PS			Element at S. No. 1, 3, 4, 5, 6 & 7
3.	Krishnagiri – Doma 765 kV D/C line with 240 MVAr SLR (convertible) at both ends on both circuits			Element at Sl. No. 1, 2, 4, 5, 6 & 7
4.	Krishnagiri – Raichur New 765 kV D/C line with 240 MVAr SLR (convertible) at Raichur New end on both circuits			Element at Sl. No. 1, 2, 3, 5, 6 & 7
5.	Establishment of 3x1500 MVA, 765/400 kV Sagar Substation with 2x330 MVAr (765 kV) bus reactors with space provision for establishment of 220 kV Switchyard			Element at Sl. No. 1, 2, 3, 4, 6 & 7
6.	Krishnagiri – Sagar 765 kV D/C line with 240 MVAr SLR (convertible) at both ends on both circuits			Element at Sl. No. 1, 2, 3, 4, 5 & 7
7.	Sagar – Nagarjunasagar 400 kV quad D/C line			Element at Sl. No. 1, 2, 3, 4, 5 & 6

The payment of Transmission Charges for any Element irrespective of its successful commissioning on or before its Scheduled COD shall only be considered after successful commissioning of the Element(s) which are pre-required for declaring the commercial operation

of such Element as mentioned in the above table.

2.7 Due dates

2.7.1 The Bidders should submit the Bids online through the electronic bidding platform before the Bid Deadline i.e. on or before **15:00 hours (IST) on March 17, 2026**. In addition to the online submission, the Bidder with lowest Final Offer will be required to submit original hard copies of Annexure 3, Annexure 4 (if applicable), Annexure 6 (if applicable) and Annexure 14 before issuance of LoI.

2.7.2 Important timelines are mentioned below:

Date	Event
12-01-2026	Issuance of RFP
02-02-2026	Submission of written clarifications/amendments, if any, on the RFP / RFP Project Documents by Bidders so as to reach BPC by 1700 hours. Such written clarifications/amendments shall be in the format provided in Annexure-20.
09-02-2026	Pre-Bid meeting(s)
20-02-2026	Issue of written clarifications and revised RFP documents
02-03-2026	Issue of final RFP Project Documents
17-03-2026	Submission of Bid (Online submission of Bid through electronic bidding portal)
17-03-2026	Opening of Technical Bid
25-03-2026	Shortlisting and announcement of Qualified Bidders on bidding portal
27-03-2026	Opening of Financial Bid - Initial Offer
30-03-2026	Electronic reverse auction (Financial Bid – Final Offer) for the Qualified Bidders.
02-04-2026	Submission of original hard copies of Annexure 3, Annexure 4, Annexure 6, as applicable and Annexure 14 by the bidder with lowest Final Offer
07-04-2026	Selection of Successful Bidder and issue of LOI
17-04-2026	Signing of RFP Project Documents and transfer of SPV (UNDER INCORPORATION)

To enable BPC to meet the schedule, all Bidders are expected to respond expeditiously during the bidding process. If any milestone/activity falls on a day which is not a working day or which is a public holiday then the milestone/activity shall be achieved/ completed on the next working day.

2.8 Validity of the Bid

2.8.1 The Bid shall remain valid for a period of one hundred and eighty (180) days from the Bid Deadline. The BPC reserves the right to reject any Bid which does not meet aforementioned validity requirement.

2.8.2 The BPC may solicit the Bidders' consent for an extension of the period of validity of the Bid.

The request and the response, thereafter, shall be in writing. In the event any Bidder refuses to extend its Bid validity as requested by the BPC, the BPC shall not be entitled to invoke the Bid Bond. A Bidder accepting the BPC's request for validity extension shall not be permitted to modify its Bid and such Bidder shall, accordingly, extend the validity of the Bid Bond as requested by the BPC within seven (7) days of such request, failing which the Bid shall not be considered as valid.

2.9 Method of Submission

2.9.1 Both the Technical and Financial Bids duly filled in, all formats and supporting shall be scanned and uploaded online through electronic bidding platform in the manner specified in **Annexure A.**

2.9.2 It may be noted that Technical Bid shall not contain any information/document relating to Financial Bid. If Technical Bid contains any such information/documents, the BPC shall not be responsible for premature opening of the Financial Bid.

All pages of the Bid, except for the Bid Bond (**Annexure 14**) and any other document executed on non-judicial stamp paper, forming part of the Bid and corrections in the Bid, if any, must be signed by the authorized signatory on behalf of the Bidder. It is clarified that the same authorized signatory shall sign all pages of the Bid. However, any published document submitted in this regard shall be signed by the authorized signatory at least on the first and last page of such document.

2.9.3 No change or supplemental information to a Bid already submitted will be accepted after the Bid Deadline, unless the same is requested for by the BPC as per Clause 2.5.6 (k).

Provided that a Bidder shall always have the right to withdraw / modify its Bid before the Bid Deadline. No Technical Bid or Initial Offer shall be modified, substituted or withdrawn by the Bidder on or after the Bid Deadline.

2.10 Preparation cost

2.10.1 The Bidders shall be responsible for all the costs associated with the preparation of the Bid and participation in discussions and attending pre-bid meetings, and finalization and execution of the RFP Project Documents (other than the TSA), etc. BPC shall not be responsible in any way for such costs, regardless of the conduct or outcome of the process of tariff based competitive bidding for selection of Bidder as TSP as per Bidding Guidelines.

2.10.2 The cost of this RFP is **Rupees Five Lakh (Rs.5,00,000/-) or U.S. Dollar Seven Thousand Only (US$7,000 /-) plus GST** as per applicable rate, which shall be non-refundable. This amount shall be paid via electronic transfer to the following Bank Account:

Bank Account Name	**: PFC Consulting Limited**
Account No.	**: 000705036117**
Bank Name	**: ICICI Bank**
IFSC	**: ICIC0000007**
Branch	**: Connaught Place, New Delhi-110001**

Immediately after issuance of RFP document, the Bidder shall submit the Pre-Award Integrity Pact in the format as prescribed in **Annexure B**, which shall be applicable for and during the bidding process, duly signed on each page by any whole-time Director / Authorized Signatory, duly witnessed by two persons, and shall be submitted by the Bidder in two (2) originals in a separate envelope, duly superscripted with Pre-Award Integrity Pact. The Bidder shall submit the Pre-Award Integrity Pact on non-judicial stamp paper of Rs. 100/- each duly purchased from the National

Capital Territory of Delhi. In case the Bidder is in a consortium, the Pre-Award Integrity Pact shall be signed and submitted by each member of the Consortium separately.

2.11 Bid Bond

2.11.1. Each Bidder shall submit the Bid accompanied by Bid Bond issued by any of the Banks listed in Annexure-17. The Bid Bond shall be valid for a period of thirty (30) days beyond the validity of the Bid.

2.11.2. Subject to the provisions of Clause 2.15.5, the Bid Bond may be invoked by the BPC or its authorized representative, without any notice, demure, or any other legal process upon occurrence of any of the following:

- Bidder withdraws during the period of Bid Validity as specified in this RFP or as extended by mutual consent of the respective Bidder(s) and the BPC
- Failure to execute the Share Purchase Agreement as per the provisions of Clause 2.15.2; or
- Failure to furnish the Contract Performance Guarantee as per Clause 2.12; or
- Failure to acquire one hundred percent (100%) equity shares of **SPV (UNDER INCORPORATION)**, along with all its related assets and liabilities, in accordance with the provisions of Clause 2.15.2; or
- Failure to comply with the provisions of Clause 2.15.5 and Clause 2.15.6, leading to annulment of the award of the Project.
- Bidders submitting any wrong information or making any misrepresentation in their Bid as mentioned in Clause 2.5.6.

Intimation of the reasons of the invocation of the Bid Bond shall be given to the Selected Bidder by the BPC within three (3) working days after such invocation.

2.11.3. The Bid Bond of the Selected Bidder shall be returned on submission of the Contract Performance Guarantee as per Clause 2.12 and the relevant provisions of the Transmission Service Agreement.

2.11.4. The Bid Bond of all the Bidders, whose Bids are declared non-responsive, shall be returned within a period of thirty (30) days after the date on which the Financial Bids are opened.

2.11.5. The Bid Bond of all unsuccessful Bidders shall be returned and released by the BPC on the same day on which the **SPV (UNDER INCORPORATION)** is transferred to the Selected Bidder. The Bid Bond of the Successful Bidder shall be returned on submission of Contract Performance Guarantee as per Clause 2.12 of this RFP and the provisions of the Transmission Service Agreement.

2.12 Contract Performance Guarantee

2.12.1. Within ten (10) days from the date of issue of the Letter of Intent, the Selected Bidder, on behalf of the TSP, will provide to the Nodal Agency the Contract Performance Guarantee for an amount of **Rs.204.25 Crore (Rupees Two Hundred Four Crore and Twenty Five Lakh Only)**. The Contract Performance Guarantee shall be initially valid for a period up to three (3) months after the Scheduled COD of the Project and shall be extended from time to time to be valid for

a period up to three (3) months after the COD of the Project and thereafter shall be dealt with in accordance with the provisions of the Transmission Service Agreement. The contract Performance Guarantee shall be issued by any of the banks listed in Annexure-17 as per format given at Annexure-15 or any of the insurance companies authorized by Insurance Regulatory and Development Authority of India as per format given at Anbnexure-15 A or PFC/REC/IREDA as per Payment on Order Instrument format given at Annexure-15 B.

2.12.2. In case the Selected Bidder is unable to obtain the Contract Performance Guarantee for the total amount from any one bank specified in **Annexure-17**, the Selected Bidder may obtain the same from not more than three (3) banks specified in Annexure-17.

2.13 Opening of Bids

Technical Bid will be opened by the Bid Opening Committee as per the following time schedule and in the office of Central Electricity Authority, in the online presence of Bidders' representatives who wish to attend:

Opening of Envelope (Technical Bid): **15:30 hours (IST) on March 17, 2026** or such other dates as may be intimated by BPC to the Bidders.

In the event of any of above dates falling on a day which is not a working day or which is a public holiday, then the bids shall be opened on the next working day at the same venue and time.

Opening of Initial Offer: Initial Offer shall be opened by the Bid Opening Committee in presence of the Bid Evaluation Committee at **15:00 hours (IST) on March 27, 2026** in the office of CEA.

The following information from each Bid will be read out to all the Bidders at the time of opening of Technical Bid:

- Name of the Bidding Company / Consortium Members in case of Bidding Consortium.

Information to be provided after opening of Initial Offer:

Only the lowest Initial Offer (s) shall be communicated to all the Qualified Bidders to participate in the e-reverse bidding process. During the e-reverse bidding process only the lowest prevailing bid should be visible to all the bidders on the electronic platform.

2.14 Enquiries

Written clarifications on the RFP and other RFP Project Documents as per Clause 2.3 and 2.4 may be sought from:

General Manager
PFC Consulting Limited
9th Floor, Wing-A, Statesman House,
Connaught Place, New Delhi - 110001
Tel. + 91 11 23443912
Fax + 91 11 23443990
Email: pfccl.itp@pfcindia.com

2.15 Other Aspects

2.15.1 The draft of the Transmission Service Agreement has been attached to this RFP. In addition to above, the following documents have also been attached to this RFP:

a) Share Purchase Agreement

When the drafts of the above RFP Project Documents are provided by the BPC, these RFP Project Documents shall form part of this RFP as per **Formats – 1 & 2** of **Annexure 20**.

Upon finalization of the RFP Project Documents after incorporating the amendments envisaged in Clause 2.4 of this RFP, all the finalized RFP Project Documents shall be provided by BPC to the Bidders at least fifteen (15) days prior to the Bid Deadline.

The Transmission Service Agreement and Share Purchase Agreement shall be signed in required number of originals so as to ensure that one (1) original is retained by each party to the Agreement(s) on the date of transfer of SPV.

Note: Kindly check 2.15.2. (b) point from SBDs

2.15.2 Within ten (10) days of the issue of the Letter of Intent, the Selected Bidder shall:

a) Provide the Contract Performance Guarantee in favour of the Nodal Agency as per the provisions of Clause 2.12;

b) Execute the Share Purchase Agreement and the Transmission Service Agreement;

c) acquire, for the Acquisition Price, one hundred percent (100%) equity shareholding of **SPV (UNDER INCORPORATION)** from PFC Consulting Limited, who shall sell to the Selected Bidder, the equity shareholding of **SPV (UNDER INCORPORATION)**, along with all its related assets and liabilities;

Stamp duties payable on purchase of one hundred percent (100%) of the equity shareholding of **SPV (UNDER INCORPORATION)**, along with all its related assets and liabilities, shall also be borne by the Selected Bidder.

Provided further that, if for any reason attributable to the BPC, the above activities are not completed by the Selected Bidder within the above period of ten (10) days as mentioned in this Clause, such period of ten (10) days shall be extended, on a day for day basis till the end of the Bid validity period.

2.15.3 After the date of acquisition of the equity shareholding of **SPV (UNDER INCORPORATION)**, along with all its related assets and liabilities, by the Selected Bidder,

i. the authority of the BPC in respect of this Bid Process shall forthwith cease and any actions to be taken thereafter will be undertaken by the Nodal Agency,

ii. all rights and obligations of **SPV (UNDER INCORPORATION)**, shall be of the TSP,

iii. any decisions taken by the BPC prior to the Effective Date shall continue to be binding on the Nodal Agency and

iv. contractual obligations undertaken by the BPC shall continue to be fulfilled by the TSP.

v. Further, the TSP shall execute the Agreement(s) required, if any, under Central Electricity Regulatory Commission (Sharing of Inter-State Transmission Charges and Losses) Regulations as amended from time to time.

2.15.4 Within five (5) working days of the issue of the acquisition of the SPV by the Successful Bidder, the

TSP shall apply to the Commission for grant of Transmission License and make an application to the Commission for the adoption of Transmission Charges, as required under Section – 63 of The Electricity Act 2003.

2.15.5 If the Selected Bidder / TSP fails or refuses to comply with any of its obligations under Clauses 2.15.2, 2.15.3 and 2.15.4, and provided that the other parties are willing to execute the Share Purchase Agreement and PFC Consulting Limited is willing to sell the entire equity shareholding of **SPV (UNDER INCORPORATION)**, along with all its related assets and liabilities, to the Selected Bidder, such failure or refusal on the part of the Selected Bidder shall constitute sufficient grounds for cancellation of the Letter of Intent. In such cases, the BPC / its authorized representative(s) shall be entitled to invoke the Bid Bond of the Selected Bidder.

2.15.6 If the TSP fails to obtain the Transmission License from the Commission, it will constitute sufficient grounds for annulment of award of the Project.

2.15.7 The annulment of award, as provided in Clauses 2.15.5 and 2.15.6 of this RFP, will be done by the Government on the recommendations of National Committee on Transmission. However, before recommending so, National Committee on Transmission will give an opportunity to the Selected Bidder / TSP to present their view point.

2.15.8 The annulment of the award, under Clause 2.15.5 or 2.15.6 of this RFP, shall be sufficient grounds for blacklisting the bidder, whose award has been annulled, for a period of five years or more, as decided by the National Committee on Transmission, provided that the blacklisting shall be done only after giving the bidder an opportunity for showing cause.

2.16 Confidentiality

2.16.1 The parties undertake to hold in confidence this RFP and RFP Project Documents and not to disclose the terms and conditions of the transaction contemplated hereby to third parties, except:

a) to their professional advisors;

b) to their officers, contractors, employees, agents or representatives, financiers, who need to have access to such information for the proper performance of their activities;

c) disclosures required under Law, without the prior written consent of the other parties of the concerned agreements.

Provided that the TSP agrees and acknowledges that the Nodal Agency may at any time, disclose the terms and conditions of the RFP and RFP Project Documents to any person, to the extent stipulated under the Law or the Bidding Guidelines.

2.17 Right of the BPC to reject any Bid

BPC reserves the right to reject all or any of the Bids/ or cancel the RFP without assigning any reasons whatsoever and without any liability.

2.18 Non submission and/or submission of incomplete data/ information required under the provisions of RFP shall not be construed as waiver on the part of BPC of the obligation of the Bidder to furnish the said data / information unless the waiver is in writing.

2.19 Fraudulent and Corrupt Practices

2.19.1. The Bidders and their respective officers, employees, agents and advisers shall observe the highest standard of ethics during the Bid process and subsequent to the issue of the LoI Notwithstanding anything to the contrary contained herein, or in the LoI, the BPC shall reject a Bid, withdraw the LoI, as the case may be, without being liable in any manner whatsoever to the Bidder, if it determines that the Bidder has, directly or indirectly or through an agent, engaged in corrupt practice, fraudulent practice, coercive practice, undesirable practice or restrictive practice in the Bid process. In such an event, the BPC shall forfeit the Bid Bond, without prejudice to any other right or remedy that may be available to the BPC hereunder or otherwise.

2.19.2. Without prejudice to the rights of the BPC under Clause 2.19.1 hereinabove and the rights and remedies which the BPC may have under the LoI, if a Bidder is found by the BPC to have directly or indirectly or through an agent, engaged or indulged in any corrupt practice, fraudulent practice, coercive practice, undesirable practice or restrictive practice during the Bid process, or after the issue of the LoI, such Bidder & its Affiliates shall not be eligible to participate in any tender or RFP issued by any BPC for an indefinite period from the date such Bidder is found by the BPC to have directly or indirectly or through an agent, engaged or indulged in any corrupt practice, fraudulent practice, coercive practice, undesirable practice or restrictive practices, as the case may be.

2.19.3. For the purposes of this Clause 2.19, the following terms shall have the meaning hereinafter respectively assigned to them:

a) **“corrupt practice”** means (i) the offering, giving, receiving, or soliciting, directly or indirectly, of anything of value to influence the actions of any person connected with the Bid process (for avoidance of doubt, offering of employment to or employing or engaging in any manner whatsoever, directly or indirectly, any official of the BPC who is or has been associated or dealt in any manner, directly or indirectly with the Bid process or the LoI or has dealt with matters concerning the Transmission Service Agreement or arising there from, before or after the execution thereof, at any time prior to the expiry of one year from the date such official resigns or retires from or otherwise ceases to be in the service of the BPC, shall be deemed to constitute influencing the actions of a person connected with the Bid Process); or (ii) engaging in any manner whatsoever, whether during the Bid Process or after the issue of the LoI or after the execution of the Transmission Service Agreement, as the case may be, any person in respect of any matter relating to the Project or the LoI or the Transmission Service Agreement, who at any time has been or is a legal, financial or technical adviser of the BPC in relation to any matter concerning the Project;

b) **"Fraudulent practice"** means a misrepresentation or omission of facts or suppression of facts or disclosure of incomplete facts, in order to influence the Bid process;

c) **“Coercive practice”** means impairing or harming, or threatening to impair or harm, directly or indirectly, any person or property to influence any person’s participation or action in the Bid process;

d) **"undesirable practice"** means (i) establishing contact with any person connected with or employed or engaged by the BPC with the objective of canvassing, lobbying or in any manner influencing or attempting to influence the Bid process; or (ii) having a Conflict of Interest; and

e) **"Restrictive practice"** means forming a cartel or arriving at any understanding or arrangement among Bidders with the objective of restricting or manipulating a full and fair competition in the Bid process.

SECTION - 3

EVALUATION OF THE TECHNICAL AND FINANCIAL BID

SECTION 3

3. EVALUATION OF BID

3.1. The evaluation process of Technical Bid comprises the following five steps:

Step I – Responsiveness check
Step II- Compliance with submission requirements
Step III– Evaluation of Technical Bids
Step IV– Evaluation of Financial Bids
Step V – Bidder Selection

3.2. STEP I – Responsiveness check

The Technical Bid submitted by the Bidder shall be initially scrutinized to establish "Responsiveness". Subject to clause 2.5.6 (k), any of the following conditions shall cause the Technical Bid to be "Non-responsive":

a) Technical Bid that are incomplete.

b) Technical Bid not signed by authorized signatory and / or stamped in the manner indicated in this RFP.

c) All pages of the Technical Bid submitted but not initialed by the authorized signatories on behalf of the Bidder.

d) Technical Bid not including the covering letter as per **Annexure 1**.

e) Technical Bid submitted by a Bidding Consortium not including the Consortium Agreement.

f) Technical Bid contains material inconsistencies in the information and documents submitted by the Bidder, affecting the Qualification Requirements.

g) Bidder submitting or participating in more than one Bid either as a Bidding Company or as a Member of Bidding Consortium.

h) More than one Member of the Bidding Consortium or a Bidding Company using the credentials of the same Parent/Affiliate.

i) Information not submitted in formats specified in the RFP.

j) Applicable Board resolutions, or any other document, as provided in Clause 2.5.2, not being submitted;

k) Bid not accompanied by a valid Bid Bond;

l) Non submission of power of attorney, supported by a Board resolution;

m) Bid validity being less than that required as per Clause 2.8 of this RFP;

n) Bid not containing Format-1 (Bidders' Undertakings) of **Annexure-8;**

o) Bidder having Conflict of Interest

p) The Bidder has not submitted a disclosure as per Annexure 13.

q) Bidders delaying in submission of additional information or clarifications sought by the BPC.

r) If the Bidder makes any misrepresentation as specified in Clause 3.7.

s) Bid being conditional in nature.

3.3. STEP II - Compliance with submission requirements

Each Bidder's Technical Bid shall be checked for compliance with the submission requirements set forth in this RFP before the evaluation of Technical Bid is taken up. **Annexure 16** and **Annexure 11A** shall be used to check whether each Bidder meets the stipulated requirements.

3.4. STEP III -Evaluation of Technical Bid

Evaluation of Technical Bid will be carried out considering the information and documents furnished by the Bidders as required under this RFP. This step would involve technical and financial evaluation of the details/ documents furnished by the Bidding Company / Bidding Consortium in support of meeting the Qualification Requirements.

3.4.1. Interpolation of financial data.

For the Qualification Requirements data provided by the Bidders in foreign currency, equivalent rupees of Networth will be calculated using bills selling exchange rates (card rate) USD/INR of State Bank of India prevailing on the date of closing of the accounts for the respective financial year as certified by their Banker.

For the purpose of calculating the aggregate capital expenditure/construction experience of the projects completed/ commissioned where such projects are executed outside India and capital expenditure is denominated in foreign currency, bills selling exchange rates (card rate) USD/INR of State Bank of India prevailing on the date of closing of the financial year in which the projects were completed and as certified by their Banker shall be considered.

For the projects executed in the current financial year bills selling (card rate) USD/INR of State Bank of India prevailing on seven (7) days prior to the last date of submission of Technical Bid and as certified by their Banker shall be considered.

For currency other than USD, Bidders shall convert such currency into USD as per the exchange rates certified by their Banker prevailing on the relevant date and used for such conversion. Such Bidders shall submit necessary certification from their Banker for the exchange rate used in the conversation.

If the exchange rate for any of the above dates is not available, the rate for the immediately available previous day shall be taken into account.

3.4.2. Bidders meeting the Qualification Requirements, subject to evaluation as specified in Clauses 3.2 to 3.4 shall be declared as Qualified Bidders and eligible for opening of Initial Offer.

3.4.3. The BPC shall upload the list of all Qualified Bidders and Non-Qualified Bidders on the bidding

portal along with the reasons for non-qualification.

3.5. STEP IV - Evaluation of Financial Bids

3.5.1. The Bids which have been found Qualified by the BPC, based on the Steps I to III as specified above in Clauses 3.2.to 3.4, shall be opened and Quoted Transmission Charges of such Initial Offer shall be ranked on the basis of the ascending Initial Offer submitted by each Qualified Bidder.

Based on such ranking of the Qualified Bidders, in the first fifty per cent of the ranking (with any fraction rounded off to higher integer) or four Qualified Bidders, whichever is higher, shall qualify for participating in the electronic reverse auction.

Provided however, in case only one Bidder remains after the Evaluation of Technical Bid (Steps 1 to III) as per Clause 3.2 to 3.4, the Initial Offer of such Bidder shall not be opened and the matter shall be referred to the Government.

Provided that in the event the number of Qualified Bidders is between two and four, then each of the responsive Bidder shall be considered as Qualified Bidders.

Provided that in the event of identical Quoted Transmission Charges discovered from the Initial Offer having been submitted by one or more Bidders, all such Bidders shall be assigned the same rank for the purposes of determination of Qualified Bidders. In such cases, all Qualified Bidders who shares the same rank till 50% of the rank (with any faction rounded off to higher integer) determined above, shall qualify to participate in the electronic reverse auction stage. In case 50% of the rank is having less than four (4) Bidders and the rank of the fourth (4th) Bidder is shared by more than one Bidder, then all such all such Bidders who share the rank of the fourth Bidder shall qualify to participate in the electronic reverse auction.

3.5.2. The Financial Bids comprising of both Initial Offer and Final Offer submitted by the Bidders shall be scrutinized to ensure conformity with the provisions of Clause 2.5.3 of this RFP. Any Bid not meeting any of the requirements as per Clause 2.5.3 of this RFP may cause the Bid to be considered "Non-responsive", at the sole decision of the BPC. Financial Bid not in conformity with the requirement of SI. No. (c) of Clause 2.5.3 of this RFP shall be rejected.

3.5.3 The Bidders shall quote the single annual Quoted Transmission Charges as specified in the format at Annexure – 21.

3.6. STEP V - Bidder Selection

3.6.1. The prevailing lowest Quoted Transmission Charges discovered from Final Offers shall only be displayed during the e-reverse bidding and the Bidder quoting such Final Offer will always remain anonymous during the e-reverse bidding. The Bidder with the prevailing lowest Quoted Transmission Charges discovered from Final Offers at the close of the scheduled or extended period of e-reverse bidding as mentioned in clause 2.5 shall be declared as the Successful Bidder, subject to verification of the original hard copies of Annexure 3, Annexure 4 (if applicable), Annexure 6 (if applicable) and Annexure 14. The Letter of Intent shall be issued to such Successful Bidder in two (2) copies.

However, if no bid is received during the e-reverse bidding stage then the Bidder with lowest quoted initial transmission charges ("Initial Offer") during e-bidding stage shall be declared as the Successful Bidder, subject to verification of the original hard copies of Annexure 3, Annexure 4 (if applicable),

Annexure 6 (if applicable) and Annexure 14. The Letter of Intent shall be issued to such Successful Bidder in two (2) copies.

In case, there is a discrepancy between the online submission and physical documents, the bid would be out rightly rejected and the bidder shall be construed to have engaged in the fraudulent practice as defined in Clause 2.19.3 with consequences as mentioned in Clause 2.19.2. Further, in such a case, the provisions of Clause 2.5.6 (j) shall apply.

3.6.2. The Selected Bidder shall unconditionally accept the LoI, and record on one (1) copy of the LoI, "Accepted unconditionally", under the signature of the authorized signatory of the Successful Bidder and return such copy to the BPC within seven (7) days of issue of LoI.

3.6.3. If the Successful Bidder, to whom the Letter of Intent has been issued, does not fulfill any of the conditions specified in Clauses 2.15.2, 2.15.3 and Clause 2.15.4, then subject to Clause 2.15.5, the BPC reserves the right to annul the award of the Project and cancel the Letter of Intent. Further, in such a case, the provisions of Clause 2.5.6 (j) shall apply.

3.6.4. The BPC, in its own discretion, has the right to reject all Bids if the Quoted Transmission Charges are not aligned to the prevailing prices.

3.7. Misrepresentation by the Bidder

If the Bidder conceals any material information or makes a wrong statement or misrepresents facts or makes a misleading statement in the Technical Bid or Bid, as the case may be, in any manner whatsoever, in order to create circumstances for the acceptance of its Technical Bid/Bid, the BPC reserves the right to reject such Technical Bid/Bid, and/ or cancel the Letter of Intent, if issued. Further, in case Letter of Intent is cancelled, consequences as per provisions of the RFP shall follow.

3.8. Disposition of Technical Bid

3.8.1. Technical Bid found to be non-responsive as per Clause **3.2,** due to any of the following conditions, shall be liable for rejection.

- Technical Bid that is incomplete.
- Technical Bid not signed by authorized signatory and / or stamped in the manner indicated in this RFP.
- All pages of the Technical Bid submitted but not initialed by the authorized signatories on behalf of the Bidder.
- Technical Bid not including the covering letter as per **Annexure 1.**
- Technical Bid contains material inconsistencies in the information and documents submitted by the Bidder, affecting the Qualification Requirements.
- Information not submitted in formats specified in the RFP.
- The Bidder has not submitted a disclosure as per **Annexure 13.**
- Bidders delaying in submission of additional information or clarifications sought by the BPC.

3.8.2. Technical Bid found to be non-responsive as per Clause **3.2,** due to any of the following conditions, shall be rejected.

- Technical Bid not received by the scheduled date and time.
- Technical Bid submitted by a Bidding Consortium not including the Consortium Agreement.

- Bidder submitting or participating in more than one response either as a Bidding Company or as a Member of Bidding Consortium.
- More than one Member of the Bidding Consortium or a Bidding Company using the credentials of the same Parent/Affiliate.
- Technical Bid having Conflict of Interest.
- If the Bidder makes any misrepresentation as specified in Clause **3.7.**

3.9. BPC reserves the right to interpret the Bid in accordance with the provisions of this RFP document and make its own judgment regarding the interpretation of the same. In this regard, BPC shall have no liability towards any Bidder and no Bidder shall have any recourse to BPC with respect to the qualification process.

BPC shall evaluate Bid using the process specified in Clause 3.1 to 3.6, at its sole discretion. BPC's decision in this regard shall be final and binding.

SECTION - 4

ANNEXURES FOR BID

SECTION – 4

I. Formats for Bid

The following formats are required to be included in the Bidder's Technical and Financial Bid. These formats are designed to demonstrate the Bidder's compliance with the Qualification Requirements set forth in Clause 2.1 of Section – 2.

Technical Bid

1. Format for the Covering Letter
2. Format for Letter of Consent from Consortium Members
3. Format for evidence of authorized signatory's authority (Power of Attorney)
4. Format for Power of Attorney from to be provided by each of the other Members of the Consortium in favour of the Lead Member
5. Format for Bidder's composition and ownership structure and Format for Authorization
6. Format for Consortium Agreement
7. Formats for Qualification Requirement
8. Format of Bidders Undertaking and details of Equity Investment
9. Authorization from Parent/Affiliate of Bidding Company/Member of Bidding Consortium whose technical/financial capability has been used by the Bidding Company/Member of Bidding Consortium.
10. Undertaking from the Technically / Financially Evaluated Entity(ies) or from Ultimate Parent Company for equity investment
11. Format of Board Resolutions
12. Format for Illustration of Affiliates
13. Format for Disclosure
14. Format for Bid Bond

14A. Format of Insurance Surety Bond For Bid Security

14B. Format of Payment On Order Instrument For Bid Security

15. Format for Contract Performance Guarantee
16. Checklist for Technical Bid submission requirements

22. Format for Affidavit

In addition to the online submission, the Bidder with lowest Final Offer will be required to submit original hard copies of Annexure 3, Annexure 4 (if applicable), Annexure 6 (if applicable) and Annexure 14 before issuance of LoI.

Financial Bid

21. Format for Financial Bid

II. The following formats are for the information to the Bidders to enable them to submit their Bid.

11A. Illustration for Applicable Board Resolution Requirements Under Clause 2.5.2

17. List of Banks
18. GRID Map of the Project
19. Format for clarification/amendments on the RFP/RFP Project Documents
20. Formats for RFP Project Documents

Bidder may use additional sheets to submit the information for its detailed Bid.

ANNEXURE 1 - COVERING LETTER

(The covering letter should be on the Letter Head of the Bidding Company/ Lead Member of the Consortium)

Date: ……
From: ……
……
……
Tel. No.: ……
Fax No.: ……
E-mail address: ……

To,
PFC Consulting Limited
9thFloor, Wing-A, Statesman House,
Connaught Place, New Delhi - 110001

Dear Sir,

Sub: **Bid for selection of Bidder as Transmission Service Provider to establish Inter-State Transmission System for "Transmission System for integration of Krishnagiri REZ Phase-I" through tariff based competitive bidding process.**

1. Being duly authorized to present and act on behalf of M/s ……. (insert name of Bidding Company / Bidding Consortium) (hereinafter called the "Bidder") and having read and examined in detail the Request for Proposal (RFP) document, the undersigned hereby submit our Technical Bid with duly signed formats and Financial Bid (Initial Offer) as stipulated in RFP document for your consideration.

2. It is confirmed that our Bid is consistent with all the requirements of submission as stated in the RFP document and subsequent clarifications/amendments as per Clause 2.3 and 2.4 of RFP.

3. The information submitted in our Bid is complete, is strictly as per the requirements stipulated in the RFP document and is correct to the best of our knowledge and understanding. We would be solely responsible for any errors or omissions in our Bid.

4. We hereby agree and undertake to procure the products associated with the Transmission System as per provisions of Public Procurement (Preference to Make in India) orders No. P45021/2/2017-PP (BE-II)-Part (4) Vol.II dated 19.07.2024 for transmission sector, as amended from time to time read with Department for Promotion of Industry and Internal Trade (DPIIT) orders in this regard.

   We hereby also agree and undertake to comply with Department of Expenditure, Ministry of Finance vide Order vide Order OM No. F.7/10/2021-PPD (1) dated 23.02.2023, as amended from time to time, regarding public procurement from a bidder of a country, which shares land border with India.

5. We hereby agree to comply with Ministry of Power order no. 25-11/6/2018 – PG dated 02.07.2020 as amended from time to time.

6. We are herewith submitting legally binding board resolution for the total equity requirement of the Project.

7. We hereby confirm that in accordance with Clause 2.1.4 of the RFP, we are herewith submitting legally binding undertaking supported by a board resolution from the ……..(Insert name of Technically Evaluated Entity and/or Financially Evaluated Entity or its Ultimate Parent Company, as the case may be) that all the equity investment obligations of …….. (Insert name of the Bidding Company) shall be deemed to be equity investment obligations of the …… (Insert name of Technically Evaluated Entity and/or Financially Evaluated Entity or its Ultimate Parent Company, as the case may be) and in the event of any default by……. (Insert name of the Bidding Company), the same shall be met by ……. (Insert name of Technically Evaluated Entity and/or Financially Evaluated Entity or its Ultimate Parent Company, as the case may be).

   [Sl. No 7 to be inserted only in case the Bidder is a Bidding Company / Lead Member of a Consortium and has sought qualification on the basis of technical and financial capability of its Affiliate(s) and/or its Parent]

8. We confirm that there are no litigations or disputes against us, which materially affect our ability to fulfill our obligations with regard to the Project.

9. We hereby confirm that we shall continue to maintain compliance with Qualification Requirements till the execution of the Transmission Service Agreement. Further, in case we emerge as Selected Bidder for the Project, we shall continue to maintain compliance with Qualification Requirements till the COD of the Project.

10. We confirm that we have studied the provisions of relevant Indian laws and regulations required to enable us to build, own, operate and transfer the said Project and to prepare this Bid.

11. We hereby confirm that we shall abide unreservedly with BPC's decision in the qualification process for selection of Qualified Bidder and further warrant that under no circumstances we shall challenge either the BPC's decision or its right to make such decision at any time in the future.

12. We confirm that the Bid shall remain valid for a period of one eighty (180) days from the Bid Deadline.

13. The details of contact person are furnished as under:
    Name: ……
    Designation: ……
    Name of the Company: ……
    Address of the Bidder: ……
    Phone Nos.: …….
    Fax Nos.: …….
    E-mail address: …….

14. Bid Bond

We have enclosed a Bid Bond of Rupees ……. Crores (Rs. …….) only or US$ ..... (…….US Dollars), in the form of bank guarantee no …… [Insert number of the Bank Guarantee] dated……[Insert Date of the Bank Guarantee] as per your proforma (Annexure-14)

from…….[Insert name of bank providing Bid Bond] and valid up to ……..in terms of Clause 2.11 of the RFP.

Or

In the form of insurance surety bond no……[Insert number of the Insurance Surety Bond] dated……[Insert Date of the Insurance Surety Bond] as per your proforma (Annexure-14A from ……[Insert name of Insurance Company providing Insurance Surety bond] and valid up to……in terms of Clause 2.11 of the RFP

Or

in the form of Payment on Order Instrument no. …… [Insert number of the Instrument] "dated…….[Insert Date of the Instrument] as per your proforma (Annexure-14B) …… [Insert name of company issuing Payment on Order Instrument] and valid up to …… in terms of Clause 2.11 of the RFP.

15. Acceptance

We hereby unconditionally and irrevocably agree and accept that the decision made by the BPC on any matter regarding or arising out of the RFP shall be binding on us. We hereby expressly waive any and all claims in respect of Bid process.

16. Familiarity With Relevant Indian Laws & Regulations

We confirm that we have studied the provisions of relevant Indian laws and regulations as required to enable us to submit this Bid and execute the RFP Project Documents (other than TSA), in the event of our selection as the TSP. We further undertake and agree that all such factors as mentioned in Clause 2.5.7 of RFP have been fully examined and considered while submitting the Bid.

It is confirmed that our Bid is consistent with all the requirements of submission as stated in the RFP and subsequent communications from BPC.

The information submitted in our Bid is complete, strictly as per the requirements stipulated in the RFP and is correct to the best of our knowledge and understanding. We would be solely responsible for any errors or omissions in our Bid.

We confirm that we have not taken any deviation so as to be deemed non-responsive with respect to the provisions stipulated at Clause 2.5.1, of this RFP.

Thanking you,

Yours sincerely,

…….

(Name and Signature of the authorized signatory in whose name Power of Attorney/ Board Resolution as per Clause 2.5.2 is issued)

Name: ……
Designation: ……
Address: ……

Date: …….
Place: ……
Company Rubber Stamp

ANNEXURE 2 - LETTER OF CONSENT FROM CONSORTIUM MEMBERS

(On the letter head of each Member of the Consortium including Lead Member)

Date: ……
From: ……
……
……
Tel. No.: ……
Fax No.: ……
E-mail address: …….

To,
PFC Consulting Limited
9thFloor, Wing-A, Statesman House,
Connaught Place, New Delhi - 110001

Dear Sir,

Sub: **Bid for selection of Bidder as Transmission Service Provider to establish Inter-State Transmission System for "Transmission System for integration of Krishnagiri REZ Phase-I" through tariff based competitive bidding process.**

We, the undersigned Member of …… (Insert name of the Bidding Consortium) have read, examined and understood the RFP document for the short-listing of Bidders as prospective TSP to establish Inter-State Transmission System for "**Transmission System for integration of Krishnagiri REZ Phase-I**" through tariff based competitive bidding process. We hereby confirm our concurrence with the Bid including in particular the Consortium Agreement submitted by ……. (Insert name of the Lead Member) in response to the RFP document.

We hereby confirm our commitment to participate in the said Bidding Consortium and invest ……. % of the total equity requirement for the Project as per the terms of the Consortium Agreement dated …… and board resolution for such investment commitment is enclosed herewith.

We hereby confirm that in accordance with Clause 2.1.4 of the RFP, we are enclosing legally binding undertaking supported by a board resolution from the ……. (Insert name of Technically Evaluated Entity and / or Financially Evaluated Entity or its Ultimate Parent Company, as the case may be) that all the equity investment obligations of ……. (Insert name of the Member) shall be deemed to be equity investment obligations of the …… (Insert name of Technically Evaluated Entity and / or Financially Evaluated Entity or its Ultimate Parent Company, as the case may be) and in the event of any default by……. (Insert name of the Member), the same shall be met by……. (Insert name of Technically Evaluated Entity and / or Financially Evaluated Entity or its Ultimate Parent Company, as the case may be). [Insert if applicable]

[To be inserted by the Lead Member only] We are also enclosing legally binding board resolution for the total equity requirement of the Project in case of any breach of any of the equity investment commitment by any of the Consortium Members, in line with the provisions of the Consortium Agreement dated ……. [Bidder to insert date of Consortium Agreement].

The details of contact person are furnished as under:
Name: …….

Designation: …….
Name of the Company: …….
Address: …….
Phone Nos.: …….
Fax Nos.: …….
E-mail address: …….

Dated the ……. day of ……. of 20…

Thanking you,

Yours faithfully,

……
(Signature)

Name: …….
Designation: …….

(Signature, Name, Designation of Authorized Signatory of Consortium Member and Company's Seal)

ANNEXURE 3 - FORMAT FOR EVIDENCE OF AUTHORIZED SIGNATORY'S AUTHORITY (POWER OF ATTORNEY)

POWER OF ATTORNEY

(To be on non-judicial stamp paper of appropriate value as per Stamp Act relevant to place of execution. Foreign companies submitting bids are required to follow the applicable law in their country)

Know all men by these presents, We …….(name and address of the registered office of the Bidder) do hereby constitute, appoint and authorize Mr./Ms. ……(name and residential address) who is presently employed with us and holding the position of ……. as our attorney, to do in our name and on our behalf, all such acts, deeds and things necessary in connection with or incidental to our Bid for selection of Bidder as Transmission Service Provider to establish Inter-State Transmission System for **"Transmission System for integration of Krishnagiri REZ Phase-I"** through tariff based competitive bidding process in the country of India, including signing and submission of all documents related to the Bid, including, undertakings, letters, certificates, acceptances, clarifications, guarantees, etc., making representations to the BPC, and providing information / responses to the BPC, representing us in all matters before the BPC, and generally dealing with the BPC in all matters in connection with our Bid for the said Project till the completion of the bidding process in accordance with the RFP and signing of the Share Purchase Agreement by all the parties thereto.

We hereby agree to ratify all acts, deeds and things lawfully done by our said attorney pursuant to this Power of Attorney and that all acts, deeds and things done by our aforesaid attorney shall and shall always be deemed to have been done by us.

All the terms used herein but not defined shall have the meaning ascribed to such terms under the RFP.

For ……. [Insert name of the Bidder on whose behalf PoA is executed]

……..
(Signature)

Name: …….
Designation: …….

Accepted

……
(Signature of the Attorney)

Name: …….
Designation: ……..
Address: .....
.....
(Name, Designation and Address of the Attorney)

Specimen signatures of attorney attested by the Executant

……
(Signature of the Executant)

……..
(Signature of Notary Public)

Place: ……
Date: ……

Notes:

1) To be executed by Bidding Company or the Lead Member, in the case of a Bidding Consortium, as the case maybe.

2) The mode of execution of the Power of Attorney should be in accordance with the procedure, if any, laid down by the applicable law and the charter documents of the executant(s) and when it is so required, the same should be under common seal of the executant affixed in accordance with the applicable procedure. Further, the person whose signatures are to be provided on the power of attorney shall be duly authorized by the executant(s) in this regard.

3) Also, wherever required, the executant(s) should submit for verification the extract of the charter documents and documents such as a Board resolution / power of attorney, in favour of the Person executing this power of attorney for delegation of power hereunder on behalf of the executant(s).

4) In case of foreign Bidders, refer to clause 2.5.6 (p)

ANNEXURE 4 - FORMAT FOR POWER OF ATTORNEY TO BE PROVIDED BY EACH OF THE OTHER MEMBERS OF THE CONSORTIUM IN FAVOUR OF THE LEAD MEMBER

POWER OF ATTORNEY

(To be on non-judicial stamp paper of appropriate value as per Stamp Act relevant to place of execution. Foreign companies submitting bids are required to follow the applicable law in their country)

KNOW ALL MEN BY THESE PRESENTS THAT M/s……., having its registered office at ……, …… and M/s …… having its registered office at ……, (Insert names and registered offices of all Members of the Consortium), the Members of Consortium, have formed a Bidding Consortium named ……. (insert name of the Consortium) (hereinafter called the **"Consortium"**) vide Consortium Agreement dated…… and having agreed to appoint M/s…… as the Lead Member of the said Consortium do hereby constitute, nominate and appoint M/s……..a company incorporated under the laws of ……and having its Registered / Head Office at ……as our duly constituted lawful Attorney (hereinafter called as **"Lead Member"**) which is one of the Members of the Consortium, to act as the Lead Member and our true and lawful attorney, to do in our name and on our behalf, all such acts, deeds and things necessary in connection with or incidental to submission of Consortium's Bid for the Project, including signing and submission of the Bid and all documents related to the Bid, including, undertakings, letters, certificates, acceptances, clarifications, guarantees, etc, making representations to the BPC, and providing information / responses to the BPC, representing us and the Consortium in all matters before the BPC, and generally dealing with the BPC in all matters in connection with our Bid for the said Project, till completion of the bidding process in accordance with the RFP and signing of the Share Purchase Agreement by all the parties thereto.

It is expressly understood that in the event of the Consortium being selected as Successful Bidder, this Power of Attorney shall remain valid, binding and irrevocable until the Bidding Consortium achieves execution of all RFP Project Documents.

We, as the Member of the Consortium, agree and undertake to ratify and confirm all whatsoever the said Attorney/Lead Member has done on behalf of the Consortium Members pursuant to this Power of Attorney and the same shall bind us and deemed to have been done by us.

All the terms used herein but not defined shall have the meaning ascribed to such terms under the RFP.

IN WITNESS WHEREOF M/s ……., as the Member of the Consortium have executed these presents on this…… day of .....

For and on behalf of
Consortium Member

…….
(Signature of the Authorized Signatory)

Name: ……
Designation: ……..
Place: ……
Date: ……

Name: ……
Designation: ……..

Place: ……
Date: ……..

Accepted
Specimen signatures of attorney attested

…….
(Signature)

……

……
(Signature of Notary Public) ……
(Name, Designation and Address of the Attorney)

Place: ……
Date: …….

Notes:

1. The mode of execution of the power of attorney should be in accordance with the procedure, if any, laid down by the applicable law and the charter documents of the executant(s) and when it is so required, the same should be under common seal of the executant affixed in accordance with the applicable procedure. Further, the person whose signatures are to be provided on the power of attorney shall be duly authorized by the executant(s) in this regard.

2. Also, wherever required, the executant(s) should submit for verification the extract of the charter documents and documents such as a Board resolution / power of attorney, in favour of the Person executing this power of attorney for delegation of power hereunder on behalf of the executant(s).

3. In case of foreign Bidders, refer to clause 2.5.6 (p)

ANNEXURE 5 - FORMAT FOR BIDDER'S COMPOSITION AND OWNERSHIP STRUCTURE

1. Corporate Details:

Please provide the following information for the Bidder. If the Bidder is a Consortium, please provide this information for each Member including the Lead Member:

a. Company's Name, Address, and Nationality:

Name: ……

Address: ……
……
……

Website Address: ……..

Country of Origin: ……

b. Year Organized: ……..

c. Company's Business Activities: …….
.....

d. Status as a Bidder:

i. Bidding Company
ii. Lead Member of the Bidding Consortium
iii. Member of the Bidding Consortium

Note: tick the applicable serial number

e. Company's Local Address in India (if applicable):

…….
…….
…….

f. Name of the Authorized Signatory: .....

g. Telephone Number: …….

h. Email Address: …….

i. Telefax Number: …….

j. Please provide the following documents:

i. Copy of the Memorandum and Articles of Association and certificate of incorporation or other equivalent organizational document (as applicable), including their amendments, certified by the Company Secretary as **Attachment 1** for Bidding Company / each Member of Bidding Consortium including Lead Member.

ii. Authority letter (as per format for authorization given below) in favour of BPC from the Bidder/every Member of the Consortium authorizing BPC to seek reference

from their respective bankers & others as **Attachment 2** as per Clause 2.1.6 of the RFP.

2. Details of Ownership Structure:

Equity holding of Bidding Company/ each Member of Bidding Consortium including Lead Member owning 10% or more of total paid up equity.

Name of the Bidding Company / Consortium Member: …….
Status of equity holding as on ……

Name of the Equity Holder	Type and No. of Shares owned	Extent of Voting Control (%)
1.		
2.		
3.		
4.		
5.		
6.		
7.		
8.		
….		

Notes:

1. The above table is to be filled in separately for each Consortium Member.
2. Status of equity holding should be provided not earlier than thirty (30) days prior to Bid Deadline.

For and on behalf of Bidding Company / Lead Member of the Bidding Consortium
M/s…….

……..
(Signature of authorized representative)
Name: ……..
Designation: ……

……..
(Stamp)

Date: ……
Place: ……

FORMAT FOR AUTHORISATION

(In case of Bidding Consortium, to be given separately by each Member)
(On Non – judicial stamp paper duly attested by notary public. Foreign companies submitting bids are required to follow the applicable law in their country)

The undersigned hereby authorize(s) and request(s) all our Bankers, including its subsidiaries and branches, any person, firm, corporation or authority to furnish pertinent information deemed necessary and requested by **PFC Consulting Limited** to verify our Bid for selection of Bidder as Transmission Service Provider to establish Inter-State Transmission system for **"Transmission System for integration of Krishnagiri REZ Phase-I"** through tariff based competitive bidding process or regarding our project development experience, financial standing and general reputation.

For and on behalf of M/s……. (Insert Name of Bidding Company or Member of the Consortium)

.....
(Signature)

Name of Authorized Signatory: …….

(Signature and Name of the authorized signatory of the Company)

Place: ……
Date: ……

……..
(Company rubber stamp/seal)

…….
(Signature of Notary Public)

Place: ……
Date: ……

ANNEXURE 6 - FORMAT FOR CONSORTIUM AGREEMENT

(To be on non-judicial stamp paper of appropriate value as per Stamp Act relevant to place of execution. Foreign companies submitting bids are required to follow the applicable law in their country)

THIS CONSORTIUM AGREEMENT executed on this..... day of .....Two thousand.....between M/s....., a company incorporated under the laws of ..... and having its Registered Office at ..... (hereinafter called the "Party 1", which expression shall include its successors, executors and permitted assigns) and M/s.....a Company incorporated under the laws of ..... and having its Registered Office at ..... (hereinafter called the "Party n", which expression shall include its successors, executors and permitted assigns) and for the purpose of submitting the Bid, acquisition of **SPV (UNDER INCORPORATION)** (in case of award) and entering into other Agreement(s) as specified in the RFP (hereinafter referred to as "Agreements") as may be entered into with the Nodal Agency.

WHEREAS, the BPC had invited Bid in response to RFP issued to …… (insert the name of purchaser of RFP) for selection of the bidder as the Transmission Service Provider to establish Inter-State Transmission System for **"Transmission System for integration of Krishnagiri REZ Phase-I"**.

AND WHEREAS, Clause 2.2.4 of the RFP document stipulates that the Bidders qualifying on the strength of a Bidding Consortium will have to submit a legally enforceable Consortium Agreement in a format specified in the RFP document wherein the Consortium Members have to commit equity of a specific percentage in the Project.

AND WHEREAS, Clause 2.2.4 of the RFP document also stipulates that the Bidding Consortium shall provide along with the Bid, a Consortium Agreement as per prescribed format whereby the Consortium Members undertake to be liable for raising the required funds for its respective equity investment commitment as specified in Consortium Agreement.

NOW THEREFORE, THIS INDENTURE WITNESSTH AS UNDER:

In consideration of the above premises and agreement all the parties in this Consortium do hereby mutually agree as follows:

1. In consideration of the selection of the Consortium as the selected bidder by the BPC, we the Members of the Consortium and parties to the Consortium Agreement do hereby unequivocally agree that M/s..... (Insert name of the Lead Member), shall act as the Lead Member as defined in the RFP for self and agent for and on behalf of ……., ..., ..., ... (the names of all the other Members of the Consortium to be filled in here).

2. The Lead Member is hereby authorized by the Members of Consortium and parties to the Consortium Agreement to bind the Consortium and receive instructions for and on behalf of the Members.

3. Notwithstanding anything contrary contained in this Consortium Agreement, the Lead Member shall always be liable for the equity investment obligations of all the Consortium Members, i.e., for both its own equity contribution as well as the equity contribution of other Members.

4. The Lead Member shall be liable and responsible for ensuring the individual and collective commitment of each of the Members of the Consortium in discharging all their respective equity

obligations. Each Consortium Member further undertakes to be individually liable for the performance of its part of the obligations without in any way limiting the scope of collective liability envisaged in this agreement.

5. Subject to the terms of this agreement, the share of each Member of the Consortium in the "issued equity share capital of the project company" shall be in the following proportion: (if applicable)

Name	Percentage of equity holding in the Project
Party 1	……..
……..	……..
Party n	……..
Total	**100%**

[**Note:** The percentage equity holding for any Consortium Member in the Project cannot be zero in the above table]

6. The Lead Member shall inter alia undertake full responsibility for liaising with lenders and mobilizing debt resources for the Project and achieving financial closure.

7. In case of any breach of any of the equity investment commitment by any of the Consortium Members, the Lead Member shall be liable for the consequences thereof.

8. Except as specified in the Agreement, it is agreed that sharing of responsibilities as aforesaid and equity investment obligations thereto shall not in any way be a limitation of responsibility of the Lead Member under these presents.

9. It is further specifically agreed that the financial liability for equity contribution of Lead Member shall, not be limited in any way so as to restrict or limit its liabilities. The Lead Member shall be liable irrespective of their scope of work or financial commitments.

10. It is expressly understood and agreed between the Members that the responsibilities and obligations of each of the Members shall be as delineated as annexed hereto as **Appendix-I,** forming integral part of this Agreement. It is further agreed by the Members that the above sharing of responsibilities and obligations shall not in any way be a limitation of joint and several responsibilities and liabilities of the Members, with regards to all matters relating to the Project.

11. It is clearly agreed that the Lead Member shall ensure performance under the Agreements and if one or more Consortium Members fail to perform its /their respective obligations under the Agreement(s), the same shall be deemed to be a default by all the Consortium Members.

12. This Consortium Agreement shall be construed and interpreted in accordance with the Laws of India and courts at **Delhi** alone shall have the exclusive jurisdiction in all matters relating thereto and arising there under.

13. It is hereby agreed that, the Lead Member shall furnish the bid bond, as stipulated in the RFP, on behalf of the Consortium Members.

14. It is hereby agreed that in case of selection of Bidding Consortium as the selected bidder, the parties to this Consortium Agreement do hereby agree that they shall furnish the contract performance guarantee on behalf of the TSP in favour of the Nodal Agency, as stipulated in the RFP and Transmission Service Agreement.

15. It is further expressly agreed that the Consortium Agreement shall be irrevocable and shall form an integral part of the RFP Project Document and shall remain valid till the execution of the Share Purchase Agreement, unless expressly agreed to the contrary by the Nodal Agency. Over the term of the Transmission Service Agreement, Central Electricity Regulatory Commission (Sharing of Inter-State Transmission Charges and Losses) Regulations as amended from time to time shall apply on the Consortium Members.

16. The Lead Member is authorized and shall be fully responsible for the accuracy and veracity of the representations and information submitted by the Consortium Members respectively from time to time in response to the RFP and for the purposes of the Project.

17. It is hereby expressly agreed between the parties to this Consortium Agreement that neither party shall assign or delegate its rights, duties or obligations under this Agreement except with the prior written consent of the Nodal Agency.

THIS CONSORTIUM AGREEMENT:

a. has been duly executed and delivered on behalf of each party hereto and constitutes the legal, valid, binding and enforceable obligation of each such party,

b. sets forth the entire understanding of the parties hereto with respect to the subject matter hereof;

c. may not be amended or modified except in writing signed by each of the parties and with prior written consent of the Nodal Agency.

IN WITNESS WHEREOF, the parties to the Consortium Agreement have, through their authorized representatives, executed these present on the Day, Month and Year first mentioned above.

For and on behalf of Consortium Member 1 (Party 1)
M/s…….

.....
(Signature of authorized signatory)

Name: …….
Designation: .....
Place: ……..
Date: ……

For and on behalf of Consortium Member n (Party n)
M/s…….

.....
(Signature of authorized signatory)

Name: ……

Designation: .....
Place: …….
Date: ……..

Attested:
……..
(Signature)
(Notary Public)

Place: …….
Date: …….

Note: In case of foreign Bidders, refer to clause 2.5.6 (p)

Appendix 1 to the Consortium Agreement:

Name of the Consortium Member	Responsibilities under the Consortium Agreement
M/s …… (Party 1)	
M/s ……	
M/s …… (Party n)	

ANNEXURE 7 A - FORMAT FOR QUALIFICATION REQUIREMENT

A. NET WORTH

To,
PFC Consulting Limited
9thFloor, Wing-A, Statesman House,
Connaught Place, New Delhi - 110001

Dear Sir,

Sub: Bid for selection of Bidder as Transmission Service Provider to establish Inter-State Transmission System for "Transmission System for integration of Krishnagiri REZ Phase-I" through tariff based competitive bidding process

1. [Note: Applicable in case of Bidding Company]

We certify that the Financially Evaluated Entity (ies) had a Networth of Rs. …… Crore or equivalent USD* computed as per instructions in this RFP based on unconsolidated audited annual accounts (refer Note-2 below) of any of the last three (3) financial years as provided in Clause 2.2.3, immediately preceding the Bid Deadline. Also, the Networth of any of the last three (3) financial years is not negative.

Name of Financially Evaluated Entity(ies)	Relationship with Bidding Company**	Financial Year	Networth (Rs. Crore)
1. …….			
2. …….			
3. …….			
….			
Total Networth			

*Equivalent USD shall be calculated as per provisions of Clause 3.4.1.
** The column for "Relationship with Bidding Company" is to be filled in only in case financial capability of Parent/Affiliate has been used for meeting Qualification Requirements.

2. [Note: Applicable in case of Bidding Consortium]

We certify that the Financially Evaluated Entity (ies) had a minimum Networth of Rs. …….. Crore or equivalent USD* computed as per instructions in the RFP and based on unconsolidated audited annual accounts (refer Note-2 below) of any of the last three (3) financial years as provided in Clause 2.2.3, immediately preceding the Bid Deadline. Also, the Networth of any of the last three (3) financial years is not negative.

Name of Consortium Member	Equity Commitment in the Project (%)	Networth of Member (Rs. Crore)	Networth Requirement to be met by Member in proportion to the Equity Commitment (Rs. Crore)	Whether the Member meets the Networth Requirement
(1)	(2)	(3) (As per table below)	(4)= (2 x Total Networth requirement for the Project)	(5)
1. ……				Yes / No
2. ……				Yes / No
..				Yes / No
Total Networth for financial requirement				

Member – I (Lead Member)

[Note: Similar particulars for each Member of the Consortium is to be furnished, duly certified by the Member's Statutory Auditors]

i. Name of Member: .....

ii. Total Networth requirement: Rs …… Crore

iii. Percentage of equity commitment for the Project by the Member: ……%

iv. Networth requirement for the Member***: Rs. ……. Crore

v. Financial year considered for the Member: …….

Name of Financially Evaluated Entity(ies)	Relationship** with Member of Consortium	Financial Year	Networth (Rs. Crore)
1. …….			
2. …….			
3. …….			
Total Networth			

* Equivalent USD shall be calculated as per provisions of Clause 3.4.1;

** The column for "Relationship with Member of Consortium" is to be filled in only in case the financial capability of Parent / Affiliate has been used for meeting Qualification Requirements;

*** Networth requirement to be met by Member should be in proportion to the equity commitment of the Member for the Project.

Yours faithfully

……

(Signature and name of the authorized signatory of the Company and Stamp)

Name : …….
Date : …….
Place : …….

……

(Signature and Stamp of statutory Auditors of Bidding Company / each Member of Consortium)

Name : …….
Date : …….
Place : …….

Date : …….

Notes:

1. Along with the above format, in a separate sheet, please provide details of computation of Networth of last three (3) financial years duly certified by Statutory Auditor.

2. Audited consolidated annual accounts of the Bidder may be used for the purpose of financial criteria provided the Bidder has at least 26% equity in each company whose accounts are merged in the audited consolidated accounts and provided further that the financial capability of such companies (of which accounts are being merged in the consolidated accounts) shall not be considered again for the purpose of evaluation of the Bid.

3. In case Bidder or a Member of Consortium takes recourse to its Parent/Affiliate for meeting technical / financial requirements, then the financial years considered for such purpose should be same for the Bidder / Member of Consortium and their respective Parent / Affiliate.

ANNEXURE 7B - FORMAT FOR TECHNICAL REQUIREMENT

To,
PFC Consulting Limited
9th Floor, Wing-A, Statesman House,
Connaught Place, New Delhi - 110001

Dear Sir,

Sub: Bid for selection of Bidder as Transmission Service Provider to establish Inter-State Transmission System for "Transmission System for integration of Krishnagiri REZ Phase-I" through tariff based competitive bidding process

1. To be used by Bidder using the development experience in infrastructure sector

We certify that M/s. …….. (Insert name of Technically Evaluated Entity (ies)) have experience of development of projects in the infrastructure sector in the last five (5) years whose aggregate capital expenditure is Rs. …… Crore or equivalent USD*. We further certify that the capital expenditure of any single project considered for meeting the technical Qualification Requirement is not less than **Rs.817 Crore (Rupees Eight Hundred Seventeen Crore Only)** or equivalent USD*. For this purpose, capital expenditure incurred on projects which have been either wholly completed / commissioned or partly completed projects put under commercial operation and for which operation has commenced till at least seven (7) days prior to the Bid Deadline has been considered.

The project(s) considered for the purpose of technical experience (as per table given below) have been executed and owned to the extent as indicated in the table below (to be at least twenty – six percent (26%)) by the Bidding Company / Lead Member of the Consortium / our Parent / our Affiliate(s) [strike off whichever is not applicable] on operation of the projects.

This technical requirement has been calculated as per the instructions provided in the RFP on the basis of following projects:

Name of Company (which has executed the project at (3)) whose technical capability has been used for Qualification Requirement	Relationship** with Bidding Company / Lead Member	Project name	Nature of Project (BOOT, BOT, BOOM, DBFOT etc.)	Relevant Infrastructure sector	Date of Financial Closure of the Project (in DD / MM / YYYY)	Date of Completion / Commissioning / Commercial Operation of partly completed projects	Project cost (Rs. Crore)	Percentage Equity Holding of Company at (1) in Completed project(s)
(1)	(2)	(3)	(4)	(5)	(6)	(7)	(8)	(9)
……		……. (Project 1)						
……		…….						
Total (Rs. Crore)								

* Equivalent USD shall be calculated as per provisions of Clause ____

** The column for "Relationship with Bidding Company / Lead Member" is to be filled in only in case technical capability of Parent/Affiliate has been used for meeting Qualification Requirements.

We further certify that the Company(ies) as indicated in column (1) of the above table, whose technical capability has / have been used for meeting the qualification requirement, has / have held shareholding respectively of at least twenty – six percent (26%) from the date of financial closure till the date of commissioning / completion of the above project(s).

2. To be used by Bidder using construction experience in infrastructure sector.

We certify that M/s. …….. (Insert name of Technically Evaluated Entity(ies)) have received aggregate payments not less than Rs. ……. Crore or equivalent USD (calculated as per provisions in Clause 3.4.1) from its client(s) for construction works fully completed during the last 5(five) financial years. We further certify that the payment received from each project shall not be less than **Rs. 817 Crore (Rupees Eight Hundred Seventeen Crore Only)** or equivalent USD (calculated as per provisions in Clause 3.4.1). For this purpose, payments received on projects that have been commissioned/completed at least seven (7) days prior to the Bid Deadline shall be considered. Further only the payments (gross) actually received, during such 5 (five) financial years shall qualify for purposes of computing the technical capacity.

We also confirm that construction works does not include cost of land supply of goods or equipment except when such goods or equipment form part of a turn-key construction contract/ EPC contract for the project.

This technical requirement has been calculated as per the instructions provided in the RFP on the basis of following projects:

Name of Company (which has executed the project at (3)) whose technical capability has been used for Qualification Requirement	**Relationship ** with Bidding Company / Lead Member**	**Project name**	**Nature of Project (EPC, Turnkey etc)**	**Relevant Infrastructure sector**	**Date of award of contract (in dd/mm/yy)**	**Date of Completion / Commissioning**	**Payment received (Rs. Crore)**
(1)	(2)	(3)	(4)	(5)	(6)	(7)	(8)
……		……. Project 1					
……		…….					
……		…….					
	Total (Rs. Crore)						

Yours faithfully

……..
(Signature and name of the authorized signatory of the Company and stamp)

Name: ……..
Date: ……..
Place: ……..

…….
(Signature and Stamp of statutory Auditors of Bidding Company/ Lead Member of Consortium)
Name: ……..
Date: ……..
Place: ……..

Date: …….

Notes:

1. Along with the above format, in a separate sheet, please provide details of computation of capital expenditure of projects duly certified by Statutory Auditor of the project company. In addition, the Statutory Auditor of the project company should also certify that the capital expenditure of projects commissioned or completed 7 days prior to Bid Deadline has been capitalized in the books of accounts.

   Additionally, in case construction experience is used, a certificate(s) from the statutory auditors stating the payments received and the concerned client(s) stating the works commissioned during the past 5 years in respect of the projects specified above. In case a particular job/ contract has been jointly executed by the Bidder (as part of a consortium), it should further support its claim for the share in work done for that particular job/ contract by producing a certificate from its statutory auditor or the client.

2. In case the accounts for the financial year in which the project claimed for meeting qualification requirement has been commissioned are not audited, the Bidder shall give declaration in this regard duly certified by its statutory auditor. In such a case, Bidder shall provide details of computation of capital expenditure of such project(s) duly certified by Statutory Auditor of the project company and the Statutory Auditor of the project company should also certify that the capital expenditure of projects commissioned or completed shall be capitalized in the books of accounts upon finalization.

3. The unconsolidated audited annual accounts of both the TEE and the Bidding Company / Lead Member for the respective financial years (financial years in which financial closure was achieved to the financial year in which the said project was completed / commissioned) should be submitted.

ANNEXURE 7C - FORMAT FOR TECHNICAL & FINANCIAL REQUIREMENT – RELATIONSHIP & DETAILS OF EQUITY SHAREHOLDING

[To be filled by Bidding Company / each Member of the Bidding Consortium including Lead Member if credentials of Parent and / or Affiliates have been used by them]

To,
PFC Consulting Limited
9th Floor, Wing-A, Statesman House,
Connaught Place, New Delhi - 110001

Dear Sir,

Sub: Bid for selection of Bidder as Transmission Service Provider to establish Inter-State Transmission System for "Transmission System for integration of Krishnagiri REZ Phase-I" through tariff based competitive bidding process

We certify that M/s. ……. (insert name of the **Bidding Company / Consortium Members**) have considered the technical and financial capability of its Parent and / or Affiliates, for the purpose of meeting Qualification Requirements as per the instructions provided in the RFP. The name of Parent and / or Affiliate, nature of relationship(s) with such Parent and / or Affiliate and details of equity holding are as follows:

Name of Company whose credentials considered	Type of credentials considered (technical and / or financial)	Relationship with Bidding Company / Consortium Member (Parent / Affiliate)	Details of equity shareholding (refer notes below)
Company 1			
…….			
…….			
…….			
……..			

NOTES:

i. In case of Parent, the equity holding of the Parent in the Bidding Company / Member of the Bidding Consortium, including the Lead Member of the Consortium, need to be specified.

ii. In case of Affiliate under direct control of Bidder, the equity holding of the Bidding Company / Member of the Bidding Consortium, including the Lead Member of the Consortium in the Affiliate, needs to be specified.

iii. In case of Affiliate under common control of Parent, the equity holding of the Parent in the Affiliate of the Bidding Company / Member of the Bidding Consortium, including the Lead Member of the Consortium, needs to be specified.

iv. Relationship of Parent / Affiliate with Bidding Company / Member of Consortium to be at the most seven (7) days prior to the Bid Deadline (as per Clause 2.1.4 of RFP)

Yours faithfully

……

(Signature and name of the authorized signatory of the Company and stamp)

Name: ……
Date: ……
Place: ……

……
(Signature and Stamp of statutory Auditors of Bidding Company / each Member of Bidding Consortium)

Name: ……..
Date: ……..
Place: ……..
Date: ……..

ANNEXURE 7D - ADDITIONAL INFORMATION FOR VERIFICATION OF FINANCIAL AND TECHNICAL CAPABILITIES OF BIDDERS.

…….
(Name of Bidder (Bidding Company/ Bidding Consortium or Technically/Financially Evaluated Entity (ies))

(Note: In case of Consortium, details to be filled in by Lead Member for each Member of the Consortium including the Lead Member and in case of the qualification requirements of Technically / Financially Evaluated Entity (ies) being used, to be filled by each of such entity (ies)

i. Financial capability (Attachment 1):

1. Bidders shall attach unconsolidated / consolidated audited annual accounts, statements, as the case may be, (refer Clause 2.1.3) for the last three (3) financial years as Attachment 1. Such unconsolidated audited annual accounts shall include a Balance Sheet, Profit and Loss Account, Auditors Report and profit appropriation account.

ii. Technical capability (Attachment 2):

a. This attachment shall include details of projects completed/commissioned or partly completed projects for which commercial operation has commenced to be considered for the purpose of meeting Qualification Requirements.

1. To be used by Bidder using development experience in infrastructure sector

Particulars	Year 1	Year 2	Year 3	Year 4	Year 5
Name(s) of project(s) from Infrastructure sectors					
Location(s) including country(s) where project was set up					
Nature of Project					
Voltage level (if any)					
Capital cost of project(s) Rs. in Crore					
*Status of the project					
% of equity owned in the project(s)					

***Note 1:** Date of completion/commissioning/commercial operation to be mentioned

Note 2: For each project listed in the table, the Bidder shall furnish an executive summary including the following information:

- Project model, i.e., BOO, BOOT, BOOM;
- Debt financing and equity raised and provided by Bidder/Bidder's Parent/Bidder's Affiliate for the project, including names of lenders and investors;
- Size and type of installation;
- Technical data/information on major equipment installed

- Description of role performed by the Bidder/Bidder's Parent/Bidder's Affiliate on the project
- Clearances taken by the Bidder/Bidder's Parent/Bidder's Affiliate including but limited to right-of-way (RoW), forest clearance and other statutory / Govt. clearances.
- Cost data (breakdown of major components)
- Name of EPC and/or other major contractor
- Construction time for the project
- Names, addresses and contact numbers of owners of the projects
- Operating reliability over the past five (5) years or since date of commercial operation
- Operating environmental compliance history
- Names of supervisory entities or consultant, if any
- Date of commercial operation
- Total duration of operation

2. To be used by Bidder using construction experience in infrastructure sector

Particulars	Year 1	Year 2	Year 3	Year 4	Year 5
Name(s) of project(s) from Infrastructure sectors					
Location(s) including country(s) where project was set up					
Nature of Project					
Voltage level (if any)					
Revenue received Rs. in Crore					
*Status of the project					
% of equity owned in the project(s)					

***Note 1:** Date of completion/commissioning/commercial operation to be mentioned

Note 2: For each project listed in the table, the Bidder shall furnish an executive summary including the following information:

- Project model, i.e., EPC, Turnkey;
- Size and type of installation;
- Technical data/information on major equipment installed
- Description of role performed by the Bidder/Bidder's Parent/Bidder's Affiliate on the project
- Cost data (breakdown of major components)
- Name of sub-contractor
- Construction time for the project
- Names, addresses and contact numbers of owners of the projects
- Operating reliability over the past five (5) years or since date of commercial operation
- Operating environmental compliance history
- Names of supervisory entities or consultant, if any
- Date of commercial operation
- Total duration of operation

iii. Attachment-3:

a. For each project listed in Attachment 2 above, certificates of final acceptance and/or certificates of good operating performance duly issued by owners for the project and the same shall be certified as true by authorized signatory of the Bidding Company or the Lead

Member of Consortium). In case the project listed in Attachment 2 is under BOOT / DBFOT mechanism, the certificates of final acceptance and/or certificates of good operating performance must be issued by the authority / independent engineer of the project as defined in the respective project agreement.

For and on behalf of Bidding Company/Consortium

M/s…….

…….

(Signature of authorized signatory)

Name: ……
Designation: ……
Date: ……
Place: ……

ANNEXURE 8 -UNDERTAKING AND DETAILS OF EQUITY INVESTMENT

Format 1: Bidders' Undertakings

[On the Letter Head of the Bidding Company/Lead Member of Bidding Consortium]

Date: .....

To,

PFC Consulting Limited
9thFloor, Wing-A, Statesman House,
Connaught Place, New Delhi - 110001

Dear Sir,

Sub: Bidders' Undertakings in respect of Bid for selection of Bidder as TSP to establish Inter-State transmission system for "Transmission System for integration of Krishnagiri REZ Phase-I"

We hereby undertake on our own behalf and on behalf of the TSP, that if selected as the Successful Bidder for the Project:

1. The Project shall comply with all the relevant electricity laws, codes, regulations, standards and Prudent Utility Practices, environment laws and relevant technical, operational and safety standards, and we shall execute any agreements that may be required to be executed as per law in this regard.

2. We confirm that the Project shall also comply with the standards and codes as per Clause 1.6.1.2 of the RFP and the TSP shall comply with the provisions contained in the Central Electricity Regulatory Commission Grant of Connectivity, Long-term Access and Medium-term Open Access in inter-state Transmission and related matters Open Access) Regulations, 2009.

3. We give our unconditional acceptance to the RFP dated **January 12, 2026** issued by the BPC and the RFP Project Documents, as amended, and undertake to ensure that the TSP shall execute all the RFP Project Documents, as per the provisions of this RFP.

4. We have submitted the Bid on the terms and conditions contained in the RFP and the RFP Project Documents. Further, the Financial Bid submitted by us is strictly as per the format provided in Annexure 21 of the RFP, without mentioning any deviations, conditions, assumptions or notes in the said Annexure.

5. Our Bid is valid up to the period required under Clause 2.8 of the RFP.

6. Our Bid has been duly signed by authorized signatory and stamped in the manner and to the extent indicated in this RFP and the power of attorney / Board resolution in requisite format as per RFP has been enclosed with this undertaking.

7. We have assumed that if we are selected as the Successful Bidder, the provisions of the Consortium Agreement, to the extent and only in relation to equity lock in and our liability thereof shall get modified to give effect to the provisions of Clause 2.5.8 of this RFP and Article 18.1 of the Transmission Service Agreement. ***(Note:*** *This is applicable only in case of a Bidding Consortium).*

8. *We confirm that our* Bid *meets the Scheduled COD of each transmission Element and the Project as specified below:*

S. No.	Name of the Transmission Element	Scheduled COD as per Gazette Notification	% of Quoted Transmission Charges recoverable on Scheduled COD of the Element of the Project	Element(s) which are pre-required for declaring the commercial operation (COD) of the respective Element
1.	Establishment of 4x1500 MVA, 765/400 kV and 5x500 MVA, 400/220 kV Krishnagiri Pooling Station near Kodumur in Kurnool district along with 2x330 MVAr (765 kV) bus reactors at Krishnagiri PS with provision of two (2) sections of 4500 MVA each at 400 kV level	30 months	100	Element at Sl. No. 2, 3, 4, 5, 6 & 7
2.	± 300 MVAR STATCOM at Krishnagiri PS			Element at Sl. No. 1, 3, 4, 5, 6 & 7
3.	Krishnagiri – Doma 765 kV D/C line with 240 MVAr SLR (convertible) at both ends on both circuits			Element at Sl. No. 1, 2, 4, 5, 6 & 7
4.	Krishnagiri – Raichur New 765 kV D/C line with 240 MVAr SLR (convertible) at Raichur New end on both circuits			Element at Sl. No. 1, 2, 3, 5, 6 & 7
5.	Establishment of 3x1500 MVA, 765/400 kV Sagar Substation with 2x330 MVAr (765 kV) bus reactors with space provision for establishment of 220 kV Switchyard			Element at Sl. No. 1, 2, 3, 4, 6 & 7
6.	Krishnagiri – Sagar 765 kV D/C line with 240 MVAr SLR (convertible) at both ends on both circuits			Element at Sl. No. 1, 2, 3, 4, 5 & 7
7.	Sagar – Nagarjunasagar 400 kV quad D/C line			Element at Sl. No. 1, 2, 3, 4, 5 & 6

We agree that the payment of Transmission Charges for any Element irrespective of its successful commissioning on or before its Scheduled COD shall only be considered after the successful

commissioning of Element(s) which are pre - required for declaring the commercial operation of such Element as mentioned in the above table.

Scheduled COD for the Project: 30 Months from Effective Date.

9. We confirm that our Financial Bid conforms to all the conditions mentioned in this RFP, and in particular, we confirm that:

   a. Financial Bid in the prescribed format of Annexure 21 has been submitted duly signed by the authorized signatory.

   b. Financial Bid is unconditional.

   c. Only one Financial Bid has been submitted.

10. We have neither made any statement nor provided any information in this Bid, which to the best of our knowledge is materially inaccurate or misleading. Further, all the confirmations, declarations and representations made in our Bid are true and accurate. In case this is found to be incorrect after our acquisition of **SPV (UNDER INCORPORATION)**, pursuant to our selection as Selected Bidder, we agree that the same would be treated as a TSP's Event of Default under Transmission Service Agreement, and relevant provisions of Transmission Service Agreement shall apply.

11. We confirm that there are no litigations or other disputes against us which materially affect our ability to fulfill our obligations with regard to the Project as per the terms of RFP Project Documents.

12. Power of attorney/ Board resolution as per Clause 2.5.2 is enclosed.

Signature and name of the authorized signatory of the Company and stamp of Bidding Company or Lead member of Consortium

Note:

1. In case of foreign Bidders, refer to clause 2.5.6 (p)

Format 2: Details of equity investment in Project

1.1.a Name of the Bidding Company/ Bidding Consortium:

1.1.b Name of the Lead Member in the case of a Bidding Consortium:

1.2 Investment details of the Bidding Company/Member of the Bidding Consortium investing in **SPV (UNDER INCORPORATION)** as per Clause 2.5.8.2.

S. No.	Name of the Bidding Company/ Member in case of a Bidding Consortium	Name of the Company investing in the equity of the _____[Name of SPV]	Relationship with Bidding Company /Member of the Bidding Consortium	% of equity participation in the _____[Name of SPV]
(1)	(2)	(3)	(4)	(5)
TOTAL				100%

* In case the Bidder proposes to invest through its Affiliate(s) / Parent Company / Ultimate Parent Company, the Bidder shall declare shareholding pattern of such Affiliate(s) / Parent Company / Ultimate Parent Company and provide documentary evidence to demonstrate relationship between the Bidder and the Affiliate(s) / Parent Company / Ultimate Parent Company. These documentary evidences could be, but not limited to, demat account statement(s) / Registrar of Companies' (ROC) certification / share registry book, etc duly certified by Company Secretary.

Members of the Consortium or the Bidding Company making investment in the equity of the _____[Name of SPV] themselves to fill in their own names in the column (3)

Signature and Name of authorized signatory in whose name power of attorney has been issued

Signature of authorized signatory

Name: …….

Designation: ……..

Date…….

Company rubber stamp

ANNEXURE 9 -AUTHORISATION FROM PARENT/ AFFILIATE OF BIDDING COMPANY/ MEMBER OF BIDDING CONSORTIUM WHOSE TECHNICAL/ FINANCIAL CAPABILITY HAS BEEN USED BY THE BIDDING COMPANY/ MEMBER OF BIDDING CONSORTIUM.

[On the Letter Head of the Parent /Affiliate]

Name: …….
Full Address: …….
Telephone No.: ……..
E-mail address: ……..
Fax / No.: ……

To

PFC Consulting Limited
9th Floor, Wing-A, Statesman House,
Connaught Place, New Delhi - 110001

Dear Sir,

Sub: Authorization for use of Technical / Financial Capability of M/s……. (Insert name of Parent / Affiliate) by M/s …….. (Insert name of Bidding Company / Member of Bidding Consortium).

We refer to the RFP dated **January 12, 2026** ('RFP') issued by you for selection of Bidder as Transmission Service Provider for establishing the Inter-State Transmission System for "**Transmission System for integration of Krishnagiri REZ Phase-I**".

We confirm that M/s. ……. (Insert name of Bidding Company/ Consortium Member) has been authorized by us to use our technical and/or financial capability [strikeout whichever is not applicable] for meeting the Qualification Requirements for "**Transmission System for integration of Krishnagiri REZ Phase-I"**.

We have carefully read and examined in detail the RFP including in particular, Clause 2.1.4 of the RFP, and we are also submitting legally binding undertaking supported by a board resolution that all the equity investment obligations of M/s…….. (Insert Name of Bidding Company / Consortium Member), shall be deemed to be our equity investment obligations and in the event of any default the same shall be met by us.
For and on behalf of M/s……. (Insert Name of Parent / Affiliate)

……
(Signature and Name of the authorized signatory of the Company and stamp)

Name: …….
Date: …….
Place: …….

Notes:

1. The above undertaking can be furnished by Ultimate Parent of Technically Evaluated Entity or Financially Evaluated Entity, as the case maybe, if legally binding undertaking is also furnished by the Ultimate Parent on behalf of such Financially Evaluated Entity/Technically Evaluated Entity.

ANNEXURE 10- FORMAT OF UNDERTAKING BY TECHNICALLY / FINANCIALLY EVALUATED ENTITY / ULTIMATE PARENT COMPANY

[On the Letter Head of the Technically / Financially Evaluated Entity / Ultimate Parent Company]

Name: ……

Full Address: ……

Telephone No.: ……

E-mail address: ……

Fax/No.: ……..

To:

Chief Executive Officer
PFC Consulting Limited
9thFloor, Wing-A, Statesman House,
Connaught Place, New Delhi - 110001

Sub: **Undertaking for equity investment**

Dear Sir,

We refer to the Request for Proposal dated **January 12, 2026** ('RFP') issued by you regarding setting up of Inter-State transmission system for **"Transmission System for integration of Krishnagiri REZ Phase-I"** Project on build, own, operate and transfer basis.

We have carefully read and examined in detail the RFP and the RFP Project Documents, including in particular, Clause 2.1.4 of the RFP and Clauses 2.5.2 and 2.5.8 of the RFP, regarding submission of an undertaking regarding the investment in the equity share capital of **SPV (UNDER INCORPORATION)** and provisions for minimum equity holding and equity lock-in. We have also noted the amount of the equity investment required to be made in **SPV (UNDER INCORPORATION)** by the ……. [Insert the name of the Bidder or the Consortium Member] for the Project.

In view of the above, we hereby undertake to you and confirm that in the event of failure of ……[Insert the name of the Bidder or the Consortium Member] to invest in full or in part, in the equity share capital of **SPV (UNDER INCORPORATION)** as specified in the Bid, we shall invest the said amount not invested by……..[Insert the name of the Bidder or the Consortium Member] in **SPV (UNDER INCORPORATION)** by purchase of existing shares or subscribing to the new shares of **SPV (UNDER INCORPORATION)**, as stipulated by you.

We have attached hereto certified true copy of the Board resolution whereby the Board of Directors of our Company has approved issue of this Undertaking by the Company.

All the terms used herein but not defined, shall have the meaning as ascribed to the said terms under the RFP.

Certified as true.

……..

(Signature and Name of the authorized signatory of the Company and stamp)

Note:

1. Wherever required, extract of the charter documents and documents such as a Board resolution should be submitted for verification.

ANNEXURE 11 - FORMATS FOR BOARD RESOLUTIONS

Format 1

Format of the Board resolution for the Bidding Company / each Member of the Consortium / investing Affiliate / Parent Company / Ultimate Parent Company, where applicable

[Reference Clause 2.5.2 of the RFP and the illustrations in Annexure 11A]

[Note: The following resolution no.1 needs to be passed by the Boards of each of the entity/ (ies) making equity investment]

The Board, after discussion, at the duly convened Meeting on …….. [Insert date], with the consent of all the Directors present and in compliance of the provisions of the Companies Act, 1956/2013, passed the following Resolution:

1. **RESOLVED THAT** pursuant to the provisions of the Companies Act, 1956 / Companies Act 2013 (as the case may be) and compliance thereof and as permitted under the Memorandum and Articles of Association of the company, approval of the Board be and is hereby accorded for investment of…….% (……per cent) of the total equity share capital of **SPV (UNDER INCORPORATION)** representing the entire amount proposed to be invested by the company for the transmission system for "**Transmission System for integration of Krishnagiri REZ Phase-I"**, partly by acquisition of the existing equity shares from PFC Consulting Limited and / or partly by subscribing to the new equity shares, as per the terms of the RFP.

[Note: Equity investment obligations by the Bidding Company/each Member of the Bidding Consortium/investing Affiliate or Parent or Ultimate Parent should add up to 100%.]

[Note: In the event the Bidder is a Bidding Consortium, the following Board resolution no. 2 also needs to be passed by the Lead Member of the Bidding Consortium]

2. **RESOLVED THAT** approval of the Board be and is hereby accorded to contribute such further amount over and above the;……. percentage (__%) limit to the extent becoming necessary towards the total equity share in the **SPV (UNDER INCORPORATION)**, obligatory on the part of the company pursuant to the terms and conditions contained in the Consortium Agreement dated ……executed by the company as per the provisions of the RFP.

[Note: In the event, the investing entity is an Affiliate or Parent or Ultimate Parent of the Bidder, the following Board resolution no. 3 shall also be passed by the Bidder]

3. **FURTHER RESOLVED THAT** the Board hereby acknowledges the Board Resolution(s) passed by the…….. [Name of the Affiliate(s)/ Parent / Ultimate Parent] regarding the investment of…….(….%) of the equity share capital requirements of **SPV (UNDER INCORPORATION)**, which is to be invested by the ……..[Name of the Affiliate(s)/ Parent / Ultimate Parent] for the **SPV (UNDER INCORPORATION)**, partly by acquisition of the existing equity shares from PFC Consulting Limited and partly by subscribing to the new equity shares, as per the terms of the RFP.

[Note: The following resolution no. 4 is to be provided by the Bidding Company / Lead Member of the Consortium only]

4. FURTHER RESOLVED THAT MR/MS ……..be and is hereby authorized to take all the steps required to be taken by the Company for submission of the Bid, including in particular, signing of the Bid, making changes thereto and submitting amended Bid, all the documents related to the Bid, certified copy of this Board resolution or letter or undertakings etc, required to be submitted to BPC as part of the Bid or such other documents as may be necessary in this regard.

Certified True Copy

Company rubber stamp to be affixed

[Notes:

1) This certified true copy should be submitted on the letterhead of the Company, signed by the Company Secretary or any Whole Time Director/ Manager (supported by a specific board resolution) of the Bidding Company or the Lead Member of Consortium.

2) The contents of the format may be suitably re-worded indicating the identity of the entity passing the resolution, i.e., the Bidding Company, each Member of the Bidding Consortium.

3) This format may be modified only to the limited extent required to comply with the local regulations and laws applicable to a foreign entity submitting this resolution. For example, reference to Companies Act 1956 / Companies Act 2013 (as the case may be) may be suitably modified to refer to the law applicable to the entity submitting the resolution. However, in such case, the foreign entity shall submit an unqualified opinion issued by the legal counsel of such foreign entity, stating that the Board resolutions are in compliance with the applicable laws of the respective jurisdictions of the issuing company and the authorizations granted therein are true and valid.]

Format 2

Format for the Board resolution of Technically / Financially Evaluated Entity / Ultimate Parent Company (in case credentials of such TEE/ FEE has been utilized by the Bidding Company or Bidding Consortium)

The Board, after discussion, at the duly convened Meeting on ……. [Insert date], with the consent of all the Directors present and in compliance of the provisions of the Companies Act, 1956 / 2013, passed the following Resolution:

RESOLVED THAT pursuant to the provisions of the Companies Act, 1956 / Companies Act, 2013 (as the case may be) and compliance thereof and as permitted under the Memorandum and Articles of Association of the company, approval of the Board be and is hereby accorded for issuing an Undertaking to the BPC, in the format specified in the RFP issued by the BPC, draft of which is attached hereto and initialed by the Chairman whereby the company undertakes to invest …….percent (.... %) of the total equity share capital of **SPV (UNDER INCORPORATION)** representing the entire amount proposed to be invested by ……[insert the name of the Bidder or Member] for the said Project, in case of failure of ……[Insert the name of the Bidder or Member] to make such investment".

FURTHER RESOLVED THAT ..... ,be and is hereby authorized to take all the steps required to be taken by the Company, including in particular, signing the said Undertaking, submitting the same to the BPC through ……[Insert name of Bidding Company/Lead Member of the Consortium] of all the related documents, certified copy of this Board resolution or letter, undertakings etc, required to be submitted to BPC as part of the Bid or such other documents as may be necessary in this regard.

Certified True Copy

Company rubber stamp to be affixed

Note:

1. This certified true copy should be submitted on the letterhead of the Company, signed by the Company Secretary or any Whole-time Director/Manager (supported by a specific board resolution) of Bidding Company or Lead Member of the Consortium.

2. The contents of the format may be suitably re-worded indicating the identity of the entity passing the resolution.

2. This format may be modified only to the limited extent required to comply with the local regulations and laws applicable to a foreign entity submitting this resolution. For example, reference to Companies Act 1956 / Companies Act 2013 (as the case may be) may be suitably modified to refer to the law applicable to the entity submitting the resolution. However, in such case, the foreign entity shall submit an unqualified opinion issued by the legal counsel of such foreign entity, stating that the Board resolutions are in compliance with the applicable laws of the respective jurisdictions of the issuing company and the authorizations granted therein are true and valid.

ANNEXURE 11A – ILLUSTRATION FOR APPLICABLE BOARD RESOLUTION REQUIREMENTS UNDER CLAUSE 2.5.2

Investor in the TSP	Entities (other than Bidder) whose credentials (financial and/or technical) used by the Bidder for meeting RFP criteria	Applicable Board Resolutions	Requirement of Undertaking (Annexure 10)
Bidder himself for 100% equity	None	a) Format 1 of Annexure 11 - Resolution: 1, 2 and 4 from the Bidder	None
Bidder himself for 100% equity	Affiliate and/or Parent Company and/or Ultimate Parent	a) Format 1 of Annexure 11 - Resolution: 1, 2, and 4 from the Bidder b) Format 2 of Annexure 11 by either Technically/ Financially Evaluated Entity(ies) whose credentials have been used, or Ultimate Parent. Provided, if the Bidder himself is the Ultimate Parent, then Format 2 need not be provided.	Yes, by either Technically / Financially Evaluated Entity(ies) Affiliate(s) whose credentials have been used, or Ultimate Parent. Provided, if the Bidder himself is the Ultimate Parent, then the undertaking need not be provided.
Bidder himself + others (Affiliate and/or Parent Company and/or Ultimate Parent) in aggregate holding 100% equity	None	a) Format 1 of Annexure 11 - Resolution: 1,2, 3 and 4 from the Bidder. b) Format 1 of Annexure 11 - Resolution: 1 from the Affiliate and /or Parent and /or Ultimate Parent investing in the equity	None
Bidder himself + others (Affiliate and/or Parent Company and/or Ultimate Parent) in	Affiliate and/or Parent Company and/or Ultimate Parent	a) Format 1 of Annexure 11 - Resolution: 1,2, 3 and 4 from the Bidder.	Yes, by either Parent/ Affiliate(s) whose credentials have been used, or Ultimate Parent

Investor in the TSP	Entities (other than Bidder) whose credentials (financial and/or technical) used by the Bidder for meeting RFP criteria	Applicable Board Resolutions	Requirement of Undertaking (Annexure 10)
Aggregate holding 100% equity		b) Format 1 of Annexure 11 - Resolution: 1 from the Affiliate and/or Parent and/or Ultimate Parent investing in the equity c) Format 2 of Annexure 11 by either Parent / Affiliate(s) whose credentials have been used and /or Ultimate Parent investing in the equity	

ANNEXURE 12 - FORMAT FOR ILLUSTRATION OF AFFILIATES

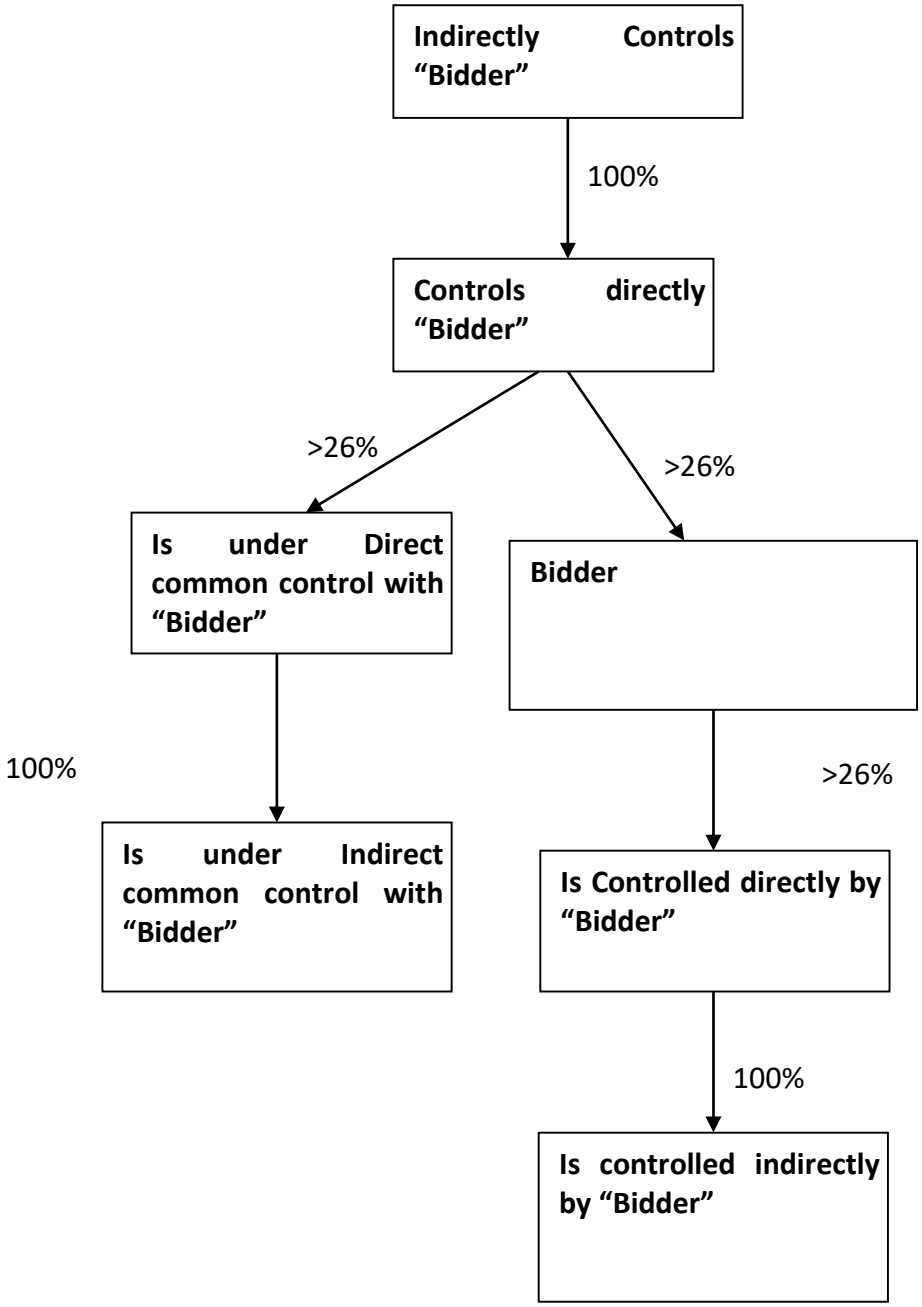

NOTE: **Bidder to provide the illustration, as applicable in their case, duly certified by the Company Secretary and supported by documentary evidence in this regard.**

ANNEXURE 13 - FORMAT FOR DISCLOSURE

[On the letter head of Bidding Company / Each Member in a Bidding Consortium]

Date: ……

DISCLOSURE

We hereby declare that the following companies with which we/ have direct or indirect relationship are also separately participating in this Bid process as per following details

S. No.	Name of the Company	Relationship
1.		
2.		
3.		

In case there is no such company please fill in the column "name of the company" as Nil.

Further we confirm that we don't have any Conflict of Interest with any other company participating in this bid process.

Certified as True

…….

(Signature)

Name: …….

Signature & Name of authorized signatory of the Company and Stamp

The above disclosure should be signed and certified as true by the authorized signatory of the Bidding Company or of the Member, in case of a Consortium).

ANNEXURE 14 - FORMAT OF THE BID BOND

FORMAT OF THE UNCONDITIONAL AND IRREVOCABLE BANK GUARANTEE FOR BID BOND

(To be on non-judicial stamp paper of appropriate value as per Stamp Act relevant to place of execution.)

In consideration of the .....[Insert name of the Bidder] submitting the Bid inter alia for establishing the Inter-State transmission system for "**Transmission System for integration of Krishnagiri REZ Phase-I"** on build, own, operate and transfer basis, in response to the RFP dated **January 12, 2026** issued by PFC Consulting Limited, and the Bid Process Coordinator (hereinafter referred to as BPC) agreeing to consider such Bid of ……. [Insert the name of the Bidder] as per the terms of the RFP, the [Insert name and address of the bank issuing the Bid Bond, and address of the Head Office] (hereinafter referred to as "Guarantor Bank") hereby agrees unequivocally, irrevocably and unconditionally to pay to PFC Consulting Limited or its authorized representative at _____[Address of BPC] forthwith on demand in writing from PFC Consulting Limited or any representative authorized by it in this behalf, any amount up to and not exceeding Rupees_____ Only (Rs _____ Crore),on behalf of M/s…….[Insert name of the Bidder].

This guarantee shall be valid and binding on the Guarantor Bank up to and including …… [Date to be inserted on the basis of Clause 2.11 of this RFP] and shall not be terminable by notice or any change in the constitution of the Guarantor Bank or by any other reasons whatsoever and our liability hereunder shall not be impaired or discharged by any extension of time or variations or alternations made, given, or agreed with or without our knowledge or consent, by or between concerned parties.

Our liability under this Guarantee is restricted to Rupees _____ Only (Rs ____ Crore). Our Guarantee shall remain in force until …….. [Date to be inserted on the basis of Clause 2.11 of this RFP]. PFC Consulting Limited or its authorized representative shall be entitled to invoke this Guarantee until …… [Insert Date, which is three sixty-five days (365) days after the date in the preceding sentence]. The Guarantor Bank hereby expressly agrees that it shall not require any proof in addition to the written demand from PFC Consulting Limited or its authorized representative, made in any format, raised at the above-mentioned address of the Guarantor Bank, in order to make the said payment to PFC Consulting Limited or its authorized representative.

The Guarantor Bank shall make payment hereunder on first demand without restriction or conditions and notwithstanding any objection, disputes, or disparities raised by the Bidder or any other person. The Guarantor Bank shall not require PFC Consulting Limited or its authorized representative to justify the invocation of this BANK GUARANTEE, nor shall the Guarantor Bank have any recourse against PFC Consulting Limited or its authorized representative in respect of any payment made hereunder.

This BANK GUARANTEE shall be interpreted in accordance with the laws of India.

The Guarantor Bank represents that this BANK GUARANTEE has been established in such form and with such content that it is fully enforceable in accordance with its terms as against the Guarantor Bank in the manner provided herein.

This BANK GUARANTEE shall not be affected in any manner by reason of merger, amalgamation, restructuring or any other change in the constitution of the Guarantor Bank.

This BANK GUARANTEE shall be a primary obligation of the Guarantor Bank and accordingly PFC Consulting Limited or its authorized representative shall not be obliged before enforcing this BANK

GUARANTEE to take any action in any court or arbitral proceedings against the Bidder, to make any claim against or any demand on the Bidder or to give any notice to the Bidder to enforce any security held by PFC Consulting Limited or its authorized representative or to exercise, levy or enforce any distress, diligence or other process against the Bidder.

Notwithstanding anything contained hereinabove, our liability under this Guarantee is restricted to Rupees _____ Only (Rs ____ Crore) and it shall remain in force until …… [Date to be inserted on the basis of Clause 2.11 of RFP], with an additional claim period of three hundred sixty-five (365) days thereafter. We are liable to pay the guaranteed amount or any part thereof under this BANK GUARANTEE only if PFC Consulting Limited or its authorized representative serves upon us a written claim or demand.

In witness whereof the Bank, through its authorized officer, has set its hand and stamp on this…….. day of .....at……

Witness:

1……. Signature: ……
Name and Address Name: …….

2. …….. Designation with Stamp:
Name and Address

Signature …….

Attorney as per power of attorney
No.……

For:
…… [Insert Name of the Bank]

Banker's Stamp and Full Address:

Dated this …… day of ……. 20……..

Notes:
The Stamp Paper should be in the name of the Executing Bank.

ANNEXURE 14 A - FORMAT OF THE SURETY BOND FOR BID SECURITY

FORMAT OF THE SURETY BOND

(To be on non-judicial stamp paper of appropriate value as per Stamp Act relevant to place of execution.)

In consideration of the .....[Insert name of the Bidder] submitting the Bid inter alia for establishing the Inter-State transmission system for "**Transmission System for integration of Krishnagiri REZ Phase-I"** on build, own, operate and transfer basis, in response to the RFP dated **January 12, 2026** issued by PFC Consulting Limited, and the Bid Process Coordinator (hereinafter referred to as BPC) agreeing to consider such Bid of ……. [Insert the name of the Bidder] as per the terms of the RFP, the [Insert name of Surety Insurer issuing the surety bond and address of Head Office] (hereinafter referred to as "Surety Insurer") hereby agrees unequivocally, irrevocably and unconditionally to pay to _____[Name of BPC] or its authorized representative at _____[Address of BPC] forthwith on demand in writing from _____[Name of BPC] or any representative authorized by it in this behalf, any amount up to and not exceeding Rupees _____ Only (Rs _____ Crore) (the "Surety Bond"),on behalf of M/s……[Insert name of the Bidder].

This surety bond shall be valid and binding on the Surety Insurer up to and including …… [Date to be inserted on the basis of Clause 2.11 of this RFP] and shall not be terminable by notice or any change in the constitution of the Surety Insurer or by any other reasons whatsoever and our liability hereunder shall not be impaired or discharged by any extension of time or variations or alternations made, given, or agreed with or without our knowledge or consent, by or between concerned parties.

Our liability under this Surety Bond is restricted to Rupees _____ Only (Rs ____ Crore). The Surety Bond shall remain in force until ……..[Date to be inserted on the basis of Clause 2.11 of this RFP]. PFC Consulting Limited or its authorized representative shall be entitled to invoke this Surety bond until …… [Insert Date, which is one hundred eighty (180) days after the date in the preceding sentence]. The Surety Insurer hereby expressly agrees that it shall not require any proof except for the written demand from PFC Consulting Limited or its authorized representative, made in any format, raised at the above mentioned address of the Surety Insurer, in order to make the said payment to PFC Consulting Limited or its authorized representative.

The Surety Insurer shall make payment hereunder on first demand without restriction or conditions and notwithstanding any objection, disputes, or disparities raised by the Bidder or any other person. The Surety Insurer shall not require PFC Consulting Limited or its authorized representative to justify the invocation of this surety bond, nor shall the Surety Insurer have any recourse against PFC Consulting Limited or its authorized representative in respect of any payment made hereunder.

This Surety Bond shall be interpreted in accordance with the laws of India.

The Surety Insurer represents that this Surety Bond has been established in such form and with such content that it is fully enforceable in accordance with its terms as against the Surety Insurer in the manner provided herein.

This Surety Bond shall not be affected in any manner by reason of merger, amalgamation, restructuring, liquidation, winding up, dissolution or any other change in the constitution of the Surety Insurer.

This Surety Bond shall be a primary obligation of the Surety Insurer and accordingly PFC Consulting Limited or its authorized representative shall not be obliged before enforcing this Surety Bond to take any action in any court or arbitral proceedings against the Bidder, to make any claim against or any

demand on the Bidder or to give any notice to the Bidder to enforce any security held by PFC Consulting Limited or its authorized representative or to exercise, levy or enforce any distress, diligence or other process against the Bidder.

The Surety Insurer declares that it has power to issue this Surety Bond and discharge the obligations contemplated herein, the undersigned is duly authorized and has full power to execute this Surety Bond for and on behalf of the Surety Insurer.

Notwithstanding anything contained hereinabove, our liability under this surety bond is restricted to Rupees _____ Only (Rs ____ Crore) and it shall remain in force until …… [Date to be inserted on the basis of Clause 2.11 of RFP], with an additional claim period of one hundred eighty (180) days thereafter. We are liable to pay the guaranteed amount or any part thereof under this Surety Bond only if PFC Consulting Limited or its authorized representative serves upon us a written claim or demand.

In witness where of:

Signature……..

Name: ……

Power of attorney No/ Employee No. as applicable.: ……..

For:

…… [Insert Name of the Surety-Insurance Company]
Banker's Seal and Full Address, including mailing address of the Head Office

Notes:

1. The Stamp Paper should be in the name of the Executing Insurance Company.

ANNEXURE 14B - Format of Payment on Order Instrument to be issued by IREDA/REC/PFC

(to be submitted separately for each Project)

No. **Date**

… ..... [Insert name of BPC]

_____

Reg: M/s_____(insert name of the bidding entity) **- Issuance of Payment on Order Instrument for an amount of Rs.____**

Dear Sir,

1. At the request of M/s……. (Insert name of the bidding entity), this Payment on Order Instrument (POI) for an amount of Rs……. (Rupees (In words)) is being issued by M/s. (Insert Name of the POI issuing Agency) ('IREDA/REC/PFC'). This Payment on Order Instrument comes into force immediately.

2. In consideration of the ……. [Insert name of the Bidding Entity] (hereinafter referred to as 'Bidder') submitting the response to RFP issued by PFC Consulting Limited for the project "**Transmission System for integration of Krishnagiri REZ Phase-I"** and [Insert name of BPC] considering such response to the RfP of M/s…….. [Insert the name of Bidding Entity] as per the terms of the RFP, the …….. [Insert name & address of IREDA/PFC/REC] hereby agrees unequivocally, irrevocably and unconditionally to pay to PFC Consulting Limited at [Insert Name of the Place from the address of the BPC] forthwith without demur on demand in writing from PFC Consulting Limited or any Officer authorized by it in this behalf, any amount up to and not exceeding Rupees [Insert amount not less than the bid bond value indicated in RFP] only, on behalf of M/s. [Insert name of the Bidding Entity].

3. In consideration of the above facts, IREDA/REC/PFC, having its registered office at …… agrees to make payment for the sum of Rs (in words ……) to …….. PFC Consulting Limited on the following conditions:

   (a) IREDA/REC/PFC agrees to make payment of the above said amount unconditionally, without demur and without protest within a period of _____ days of receipt of request from [Insert name of BPC] within the validity period of this letter as specified herein;
   (b) The commitment of IREDA/REC/PFC, under this Payment on Order Instrument will have the same effect as that of the commitment under the Bank Guarantee issued by any Public Sector Bank and shall be enforceable in the same manner as in the case of a Bank Guarantee issued by a Bank and the same shall be irrevocable and shall be honoured irrespective of any agreement or its breach between IREDA/REC/PFC or its constituents notwithstanding any dispute that may be raised by them against [Insert name of BPC];
   (c) The liability of IREDA/REC/PFC continues to be valid and binding on IREDA/REC/PFC and shall not be terminated, impaired, and discharged by virtue of change in its constitution and specific liability under this POI shall be binding on its successors or assignors;
   (d) The liability of IREDA/REC/PFC shall continue to be valid and binding on IREDA/REC/PFC and shall not be terminated/impaired/discharged by any extension of time or variation

and alteration made, given or agreed with or without knowledge or consent of the parties ([Insert name of BPC] and Bidder), subject however to the maximum extent of amount stated herein and IREDA/REC/PFC is not liable to any interest or costs etc.;

(e) This Payment on Order Instrument can be invoked either partially or fully, till the date of validity;

(f) IREDA/REC/PFC agrees that it shall not require any proof in addition to the written demand by [Insert name of BPC] made in any format within the validity period. IREDA/REC/PFC shall not require [Insert name of BPC] to justify the invocation of the POI against the Bidder, to make any claim against or any demand against the Bidder or to give any notice to the Bidder;

(g) The POI shall be the primary obligation of IREDA/REC/PFC and …….. [Insert name of BPC] shall not be obliged, before enforcing the POI, to take any action in any court or arbitral proceedings against the Bidder;

(h) The POI shall not be affected in any manner by reason of merger, amalgamation, restructuring or any other changes in constitution of IREDA/REC/PFC;

(i) Neither the …….. [Insert name of BPC] is required to justify the invocation of this POI nor shall IREDA/REC/PFC have any recourse against the …….. [Insert name of BPC] in respect of the payment made under this POI.

4. Notwithstanding anything contrary contained anywhere in this POI or in any other documents, this POI is and shall remain valid up to [Insert the date of validity of the POI as per Clause 2.11.1 of the RFP], with an additional claim period of three hundred and sixty-five (365) days thereafter and IREDA/REC/PFC shall make payment thereunder only if a written demand or request is raised within the said date and to the maximum extent of Rs…….. and IREDA/REC/PFC shall in no case be liable for any interest, costs, charges, and expenses and IREDA's/REC's/PFC's liability in no case will exceed more than the above amount stipulated.

5. In pursuance of the above, IREDA/REC/PFC and [Insert name of BPC] have signed an Umbrella Agreement dated …… setting out the terms and conditions for issue of letter of undertaking by IREDA/REC/PFC to PFC Consulting Limited and the said terms and conditions shall be read as a part of this POI issued for the project of PP mentioned above.

Thanking you,

Yours faithfully
For and on behalf of
M/s……
(Name of the POI issuing agency)

( )
General Manager

Copy to
M/s……. as per their request

( )
General Manager

ANNEXURE 15 - FORMAT FOR CONTRACT PERFORMANCE GUARANTEE

(To be on non-judicial stamp paper of appropriate value as per Stamp Act relevant to place of execution. Foreign entities submitting Bids are required to follow the applicable law in their country)

In consideration of the …… [Insert name of the SPV or Selected Bidder on behalf of SPV or Lead Member in case of the Consortium, with address] agreeing to undertake the obligations under the Transmission Service Agreement dated …… and the other RFP Project Documents and the Nodal Agency and PFC Consulting Limited, agreeing to execute the RFP Project Documents with the Selected Bidder, regarding setting up the Project, the……[Insert name and address of the bank issuing the guarantee and address of the head office] (hereinafter referred to as "Guarantor Bank") hereby agrees unequivocally, irrevocably and unconditionally to pay to the Nodal Agency at…… [Insert Place and Address of the Nodal Agency indicated in TSA] forthwith on demand in writing from the Nodal Agency or any Officer authorized by it in this behalf, any amount up to and not exceeding Rupees……Crores (Rs…….) only [Insert the amount of the bank guarantee] on behalf of M/s…… [Insert name of the Selected Bidder / SPV].

This guarantee shall be valid and binding on the Guarantor Bank up to and including ……and shall not be terminable by notice or any change in the constitution of the Bank or the term of the Transmission Service Agreement or by any other reasons whatsoever and our liability hereunder shall not be impaired or discharged by any extension of time or variations or alternations made, given, or agreed with or without our knowledge or consent, by or between parties to the respective agreement.

Our liability under this Guarantee is restricted to Rupees ……. Crores (Rs……) only. Our Guarantee shall remain in force until…… [Insert the date of validity of the Guarantee as per Clause 2.12.1 of the RFP]. The Nodal Agency shall be entitled to invoke this Guarantee up to three hundred sixty five (365) days of the last date of the validity of this Guarantee.

The Guarantor Bank hereby expressly agrees that it shall not require any proof in addition to the written demand from the Nodal Agency, made in any format, raised at the above mentioned address of the Guarantor Bank, in order to make the said payment to the Nodal Agency.

The Guarantor Bank shall make payment hereunder on first demand without restriction or conditions and notwithstanding any objection by **SPV (UNDER INCORPORATION)**, …… [Insert name of the Selected Bidder], ……. [Insert name of the TSP] and/or any other person. The Guarantor Bank shall not require the Nodal Agency to justify the invocation of this BANK GUARANTEE, nor shall the Guarantor Bank have any recourse against the Nodal Agency in respect of any payment made hereunder.

This BANK GUARANTEE shall be interpreted in accordance with the laws of India.

The Guarantor Bank represents that this BANK GUARANTEE has been established in such form and with such content that it is fully enforceable in accordance with its terms as against the Guarantor Bank in the manner provided herein.

This BANK GUARANTEE shall not be affected in any manner by reason of merger, amalgamation, restructuring, liquidation, winding up, dissolution or any other change in the constitution of the Guarantor Bank.

This BANK GUARANTEE shall be a primary obligation of the Guarantor Bank and accordingly the Nodal Agency shall not be obliged before enforcing this BANK GUARANTEE to take any action in any court or arbitral proceedings against **SPV (UNDER INCORPORATION)** or the Selected Bidder, to make any claim against or any demand on **SPV (UNDER INCORPORATION)** or the Selected Bidder, as the case may be, or to give any notice to **SPV (UNDER INCORPORATION)** or the Selected Bidder, as the case may be, or to enforce any security held by the Nodal Agency or to exercise, levy or enforce any

distress, diligence or other process against **SPV (UNDER INCORPORATION)** or the Selected Bidder, as the case may be.

The Guarantor Bank acknowledges that this BANK GUARANTEE is not personal to the Nodal Agency and may be assigned, in whole or in part, (whether absolutely or by way of security) by Nodal Agency to any entity to whom the Nodal Agency is entitled to assign its rights and obligations under the Transmission Service Agreement.

The Guarantor Bank hereby agrees and acknowledges that the Nodal Agency shall have a right to invoke this Bank Guarantee either in part or in full, as it may deem fit.

Notwithstanding anything contained hereinabove, our liability under this Guarantee is restricted to Rupees ……..Crore (Rs ……..) only and it shall remain in force until [Date to be inserted on the basis of Article 3.1.2 of TSA], with an additional claim period of three hundred sixty five (365) days thereafter. This BANK GUARANTEE shall be extended from time to time for such period, as may be desired by…… [Insert name of the Selected Bidder or Lead Member in case of the Consortium or SPV]. We are liable to pay the guaranteed amount or any part thereof under this Bank Guarantee only if the Nodal Agency serves upon us a written claim or demand.

In witness where of:

Signature……

Name: ……

Power of attorney No.: ……..

For:

…… [Insert Name of the Bank]

Banker's Seal and Full Address, including mailing address of the Head Office

Notes:

1. The Stamp Paper should be in the name of the Executing Bank.

ANNEXURE 15A: FORMAT FOR SURETY INSURANCE CONTRACT

(To be on non-judicial stamp paper of appropriate value as per Stamp Act relevant to place of execution.
Foreign entities submitting Bids are required to follow the applicable law of India)

In consideration of the ..... [Insert name of the SPV or Selected Bidder on behalf of SPV or Lead Member in case of the Consortium, with address] (hereinafter referred to as the 'Principal Debtor' for the purposes of this Surety Insurance Contract as provided in Section 126 of the Indian Contract Act, 1872) having been selected to undertake the Transmission Project on the terms and conditions contained in the Transmission Service Agreement dated ……/ to be executed as per the Model Transmission Service Agreement provided along with the Request for Proposal ('RFP') and other RFP Project Documents, subject to the condition of providing a Performance Bank Guarantee or a Surety Insurance Contract guaranteeing/insuring the due performance of the obligations under the Transmission Service Agreement, to the Central Transmission Utility of India Limited ('CTUIL') [herein after referred to as the Nodal Agency], the [Insert name and address of the Insurance Company issuing the Surety Insurance Contract and address of the head office] (hereinafter referred to as "Surety") hereby agrees unequivocally, irrevocably, absolutely and unconditionally, without demur, to pay to the Nodal Agency at ..... [Insert Place and Address of the Nodal Agency indicated in Transmission Service Agreement, or to the designated Bank Account of the Nodal Agency, namely……..] forthwith on demand in writing from the Nodal Agency, or any Officer authorized by it in this behalf, intimated to the Surety at the address mentioned above, any amount as may be decided by the Nodal Agency not exceeding Rupees ……Crores (Rs……..) only [Insert the amount of the Surety Insurance Contract]

The Surety hereby acknowledges, accepts and confirms that the Surety has received from the Principal Debtor, by way of premium the entire consideration for the Surety to execute, in favour of the Nodal Agency, this Surety Insurance Contract, as extended by the Surety from time to time and assuming the obligation to pay to the Nodal Agency the amount in terms hereof, without any requirement for payment of any other consideration to the Surety by the Principal Debtor, or otherwise.

This Surety Insurance Contract shall be valid and binding on the Surety, as the principal obligation of the Surety to pay on demand by the Nodal Agency, and shall not be terminable by notice or any change in the constitution of the Surety or the term of the Transmission Service Agreement or by any other reasons whatsoever and the liability hereunder of the Surety shall not be impaired or discharged by any extension of time or variations or alternations made, given, or agreed (with or without the knowledge or consent of the Surety) by or between the Principal Debtor and the Nodal Agency.

The liability of the Surety under this Surety Insurance Contract is restricted to Rupees ……. Crores (Rs) only. The Surety Insurance Contract shall remain in force until [Insert the date of validity of the Surety Insurance Contract]. The Nodal Agency shall be entitled to invoke this Surety Insurance Contract up to three hundred sixty five (365) days after the last date of the validity of this Surety Insurance Contract.

The Surety hereby expressly agrees that it shall not require any proof except for the written demand from the Nodal Agency, containing the statement that the contractor has failed to meet its

contractual obligations raised at the above mentioned address of the Surety (address of Surety office should be a place in NCR only) and the Surety shall pay the amount without reference to the Principal Debtor.

Any such demand made by the Nodal Agency on the Surety shall be conclusive and binding not withstanding any difference between the Nodal Agency and the Principal Debtor or any dispute pending before any Court, Tribunal, Arbitrator or any other authority. The Surety undertakes not to revoke this guarantee during its currency without previous consent of the Nodal Agency and further agrees that the Surety Insurance Contract herein contained shall continue to be enforceable till the Nodal Agency discharges this contract or till the expiry of tenor(including Claim period) whichever is earlier.

The Surety shall make payment hereunder within two (02) working days on first demand without restriction or conditions and notwithstanding any objection by the Principal Debtor, namely, …… [Insert name of SPV], or ……. [Insert name of the Selected Bidder], or ……. [Insert name of the TSP] and/or any other person. The Surety shall not require the Nodal Agency to justify the invocation of this Surety Insurance Contract, nor shall the Surety have any recourse against the Nodal Agency in respect of any payment made hereunder.

This SURETY INSURANCE CONTRACT shall be interpreted in accordance with the laws of India.

This SURETY INSURANCE CONTRACT is being executed by the Surety in terms of the IRDAI (Surety Insurance Contract) Guidelines, 2022 and the Surety hereby acknowledges, accepts and confirms that this Surety Insurance Contract shall be a Contract of Guarantee as provided under Section 126 of the Indian Contract Act, 1872 and further shall be covered by Section 14(3) (b) of the Insolvency and Bankruptcy Code, 2016 (as amended) shall be enforceable as such.

The Surety represents that this Surety Insurance Contract has been established in such form and with such content that it is fully enforceable in accordance with its terms as against the Surety in the manner provided herein.

T**his SURETY INSURANCE CONTRACT** shall not be affected in any manner by reason of merger, amalgamation, restructuring, liquidation, winding up, dissolution or any other change in the constitution of the Surety.

In order to give effect to this surety Bond, the Nodal Agency shall be entitled to act as if the surety insurer were the principal debtor and any change in the constitution of the contractor and/or the surety insurer, whether by their absorption with any other body or corporation or otherwise, shall not in any way or manner affect the liability or obligation of the surety insurer under this surety Bond.

This SURETY INSURANCE CONTRACT shall be a primary obligation of the Surety as a Principal to pay on demand by the Nodal Agency and the Nodal Agency shall not be obliged before enforcing this Surety Insurance Contract to take any action in any court or arbitral proceedings against the Principal Debtor, namely, …… [Insert name of SPV], or ..... [Insert name of the Selected Bidder], or ..... [Insert name of the TSP] and/or any other person, as the case may be, to make any claim against or any demand on the Principal Debtor, namely,..... [Insert

name of SPV], or ……. [Insert name of the Selected Bidder], or ..... [Insert name of the TSP] and/or any other person, as the case may be, or to give any notice to Principal Debtor, namely…… [Insert name of SPV], or ……. [Insert name of the Selected Bidder], or … ..... [Insert name of the TSP] and/or any other person, as the case may be, or to enforce any security held by the Nodal Agency or to exercise, levy or enforce any distress, diligence or other process against the Principal Debtor, namely, …… [Insert name of SPV], or ……. [Insert name of the Selected Bidder], or ……. [Insert name of the TSP] and/or any other person, as the case may be.

The Surety acknowledges that this Surety Insurance Contract is not personal to the Nodal Agency and may be assigned, in whole or in part, (whether absolutely or by way of security) by Nodal Agency to any entity to whom the Nodal Agency is entitled to assign its rights and obligations under the Transmission Service Agreement Provided that any such assignment shall be in compliance with the relevant provisions of the Insurance Act 1938

The Surety hereby agrees and acknowledges that the Nodal Agency shall have a right to invoke this Surety Insurance Contract either in part or in full, as it may deem fit. In case of invocation of this Surety Insurance Contract in part, besides making payment for the part of Surety Insurance Contract invoked, surety at the request of nodal agency shall amend the value of Surety Insurance Contract to the extent of balance amount.

The Surety undertakes not to revoke this Surety Contract during its currency, except with the previous express consent of the Nodal Agency in writing and declares and warrants that it has the power to issue this Surety Contract and the undersigned has full powers to do so on behalf of the Surety

In witness where of:

Signature…….

Name: ……

Power of attorney No/ Employee No. as applicable. :…….

For:

… ..... [Insert Name of the Surety- Insurance Company]

Banker's Seal and Full Address, including mailing address of the Head Office

Notes:

1. The Stamp Paper should be in the name of the Executing Insurance Company.

ANNEXURE 15B: FORMAT FOR ISSUANCE OF PAYMENT ON ORDER INSTRUMENT

Dear Sir,

1. Indian Renewable Energy Development Agency Limited ('IREDA")/PFC/REC has sanctioned a non-fund based limit loan of Rs. (Rupees…… Only) to M/s. …… [Insert name of SPV or selected Bidder] under the Loan Agreement executed on ……. to execute Transmission System Projects.

2. In consideration of the .....[Insert name of the SPV or Selected Bidder on behalf of SPV or Lead Member in case of the Consortium, with address] for the purposes of this Payment on Order Instrument ("POI") having been selected to undertake the Transmission Project on the terms and conditions contained in the Transmission Service Agreement dated ……/ to be executed as per the draft of the Model Transmission Service Agreement provided along with the Request for Proposal („RFP") and other RFP Project Documents, subject to the condition of providing a POI guaranteeing the due performance of the obligations under the Transmission Service Agreement to the Nodal Agency/Central Transmission Utility of India Limited („CTUIL"), the……[Insert name and address of the non-banking financial institutions(IREDA/PFC/REC) issuing the POI and address of the head office] (hereinafter referred to as "Guarantor") hereby agrees unequivocally, irrevocably, absolutely and unconditionally, without demur, to pay to the Nodal Agency at.....[Insert Place and Address of the Nodal Agency indicated in Transmission Service Agreement, or to the designated Bank Account of the Nodal Agency, namely……..] forthwith on demand in writing from the Nodal Agency, or any Officer authorized by it in this behalf, intimated to the Guarantor at the address mentioned above, any amount as may be decided by the Nodal Agency not exceeding Rupees.....Crores (Rs) only [Insert the amount of Payment on Order Instrument]

3. At the request of ……and on behalf of M/s. ……, [Insert name of SPV or selected Bidder] this Payment on Order Instrument (POI) for an amount of Rs …….. (Rupees ……..) is being issued with IREDA/PFC/REC assuming the obligations to remit such amount to CTUIL from the sanctioned loan.

4. This Payment on Order Instrument comes into force immediately and IREDA/PFC/REC confirms that it has sufficient amount out of the sanctioned loan and shall maintain the required amount to pay under this Payment on Order Instrument, during the validity and claim period of this Payment on Order Instrument.

5. This POI has been issued by IREDA/PFC/REC utilizing the credit limit of M/s……..[Insert name of SPV or selected Bidder] IREDA/PFC/REC confirms that its liability to pay under this Payment on Order Instrument shall be primary and independent of whether at the time of invocation of Payment on Order Instrument, the sanctioned funds are available or not and notwithstanding, the status of M/s. …… [Insert name of SPV or selected Bidder] at the relevant time and to whether IREDA/PFC/REC is able to recover the amount advanced by it to the said developer.

6. IREDA/PFC/REC and M/s. [Insert name of SPV or selected Bidder] hereby

acknowledges, accepts and confirms that this Payment on Order Instrument shall be a Contract of Guarantee as provided under Section 126 of the Indian Contract Act, 1872 and further shall be covered by Section 14(3) (b) of the Insolvency and Bankruptcy Code, 2016 (as amended) shall be enforceable as such.

7. IREDA/PFC/REC liability under this POI is restricted to Rupees Crores (Rs……) only. This POI shall remain in force until…… [Insert the date of validity of the POI]. The Nodal Agency shall be entitled to invoke this POI up to three hundred sixty-five (365) days after the last date of the validity of this POI. This POI shall be extended from time to time for such period, as may be desired by the TSP.

8. The Guarantor hereby expressly agrees that it shall not require any proof except for the written demand from the Nodal Agency, raised at the above-mentioned address of the Guarantor (address of Guarantor office should be in NCR only) and the Guarantor shall pay the amount to the Nodal Agency without reference to the TSP.

9. Any such demand made by the Nodal Agency on the Guarantor shall be conclusive and binding not withstanding any difference between the Nodal Agency and the TSP or any dispute pending before any Court, Tribunal, Arbitrator or any other authority. The Guarantor undertakes not to revoke this guarantee during its currency without previous consent of the Nodal Agency and further agrees that the POI herein contained shall continue to be enforceable till the Nodal Agency discharges this contract or till the expiry of tenure or (including Claim period) whichever is earlier.

10. The Guarantor shall make payment hereunder within two (02) working days on first demand without restriction or conditions and notwithstanding any objection or disputes raised by the TSP, namely, …… [Insert name of SPV], or [Insert name of the Selected Bidder], or ……. [Insert name of the TSP] and/or any other person. The Guarantor shall not require the Nodal Agency to justify the invocation of this POI, nor shall the Guarantor have any recourse against the Nodal Agency in respect of any payment made hereunder.

11. This POI shall be interpreted in accordance with the laws of India.

12. The Guarantor represents that this POI Contract has been established in such form and with such content that it is fully enforceable in accordance with its terms as against the Guarantor in the manner provided herein.

13. This POI shall not be affected in any manner by reason of merger, amalgamation, restructuring, liquidation, winding up, dissolution or any other change in the constitution of the Guarantor.

14. This POI Contract shall be a primary obligation of the Guarantor as a Principal to pay on demand by the Nodal Agency and the Nodal Agency shall not be obliged before enforcing this POI Contract to take any action in any court or arbitral proceedings against the TSP, namely, …… [Insert name of SPV], or ..... [Insert name of the Selected Bidder], or [Insert name of the TSP] and/or any other person, as the case may be to make any claim against or any demand on the TSP, namely, …… [Insert name of SPV], or ……. [Insert name of the Selected Bidder], or … ..... [Insert name of the TSP] and/or any other person, as the case may be, or to give any notice to TSP, namely…… [Insert name of SPV], or..... [Insert name of

the Selected Bidder], or ……. [Insert name of the TSP] and/or any other person, as the case may be, or to enforce any security held by the Nodal Agency or to exercise, levy or enforce any distress, diligence or other process against the TSP, namely, …… [Insert name of SPV], or ..... [Insert name of the Selected Bidder], or ……. [Insert name of the TSP] and/or any other person, as the case may be.

15. The Guarantor acknowledges that this POI Contract is not personal to the Nodal Agency and may be assigned, in whole or in part, (whether absolutely or by way of security) by Nodal Agency to any entity to whom the Nodal Agency is entitled to assign its rights and obligations under the Transmission Service Agreement.

16. The Guarantor hereby agrees and acknowledges that the Nodal Agency shall have a right to invoke this POI Contract either in part or in full, as it may deem fit. In case of invocation of this POI Contract in part, besides making payment for the part of POI Contract invoked, Guarantor at the request of Nodal Agency shall amend the value of POI Contract to the extent of balance amount.

IN WITNESS WHERE OF the non- banking financial institutions through its authorized officer, has set its hand and stamp on this……. day of……..at……

Signature……. Name:

…… Power of attorney

No.: …….. For:

…..... [Insert Name of the non- banking financial institutions Company]

Seal and Full Address, including mailing address of the Head Office

ANNEXURE 16 – FORMAT OF CHECKLIST FOR TECHNICAL BID SUBMISSION REQUIREMENTS

[This format needs to be duly filled in, signed by the authorized signatory of the Bidder (Bidding Company / Lead Member in case of a Bidding Consortium) and submitted along with the Bidder's Technical Bid]

Technical Bid Submission Requirements	Response (Yes / No)
1. Format for the Covering Letter on the letterhead of Bidding Company or Lead Member of the Consortium, as applicable; 2. Format for Letter of Consent from each Consortium Member, including Lead Member, on their respective letterheads; 3. Format for evidence of authorized signatory's authority; 4. Board resolution from the Bidding Company / Lead Member of the Consortium in favour of the person executing the Power of Attorney as per Annexure 3; 5. Power of Attorney from each Consortium Member in favour of Lead Member to be provided by each of the other Members of the Consortium as per Annexure 4; 6. Board Resolution from each Member of the Consortium, other than the Lead Member, in favour of their respective authorized representatives for executing the POA, Consortium Agreement and signing of the requisite formats; 7. Format for Bidder's composition and ownership structure, along with status of equity holding (owning ten percent or more of the total paid up equity) not earlier than thirty (30) days prior to the Bid Deadline as per Annexure 5; 8. Consortium Agreement duly signed as per Annexure 6, along with Appendix-1, indicating the responsibilities and obligations of each Member of the Consortium; 9. Format for Qualification Requirement: a. Calculation sheets, detailing computation of Networth considered for meeting Qualifying Requirements, duly signed and stamped by the Statutory Auditor of the Bidding Company / each Member in case of a Bidding Consortium / FEE in cases where credentials of FEE are taken; b. Calculation sheets, detailing computation of capital expenditure of projects and revenue received in construction projects considered for meeting Qualification Requirements, duly signed and stamped by the Statutory Auditor of the Bidding Company / Lead Member in case of Bidding Consortium / TEE in cases where credentials of TEE are taken;	
c. Last financial year unconsolidated / consolidated audited annual accounts / statements, as the case may be, of the Financially Evaluated Entity / Technical Evaluated Entity	

Technical Bid Submission Requirements	Response (Yes / No)
d. Unconsolidated audited annual accounts of both the TEE and the Bidding Company/Lead member, as applicable, from the financial years in which financial closure was achieved till the financial year in which the said project was completed / commissioned. 10. Copy of the Memorandum and Articles of Association and certificate of incorporation or other organizational document (as applicable), including their amendments, certified by the Company Secretary of Bidding Company or each Member in case of a Consortium including Lead Member. 11. Attachment of Annexure 7(D), detailing projects completed / commissioned and for which commercial operation has commenced including Executive Summary for each project. 12. For each project listed in the attachment above, certified true copy of the certificates of final acceptance and / or certificates of good operating performance duly issued by owners or clients for the project, duly signed by authorized signatory in support of technical capability as defined in Clause 2.1.2 of RFP. 13. Authority letter in favour of BPC from the Bidder/every Member of the Consortium authorizing the BPC to seek reference from their respective bankers & others. 14. Authorization from Parent / Affiliate of Bidding Company / Member of Bidding Consortium whose technical / financial capability has been used by the Bidding Company / Member of Bidding Consortium. 15. Initialing of all pages of Technical Bid by the Authorized Signatory in whose favour the POA (Annexure 3) has been executed. 16. Format for Illustration of Affiliates at the most seven (7) days prior to the Bid Deadline, duly certified by Company Secretary and supported by documentary evidence. 17. Certified copy of the Register of Members / Demat Account Statement, Share Certificate, Annual Return filed with ROC etc. submitted as documentary evidence along with Annexure 12. 18. Format for Disclosure by Bidding Company / each Member of the Consortium. 19. Format for Affidavit by the Bidding Company / each Member of the Consortium	
20. Format for Authorization submitted in Non-Judicial stamp paper duly notarized. 21. Bidders Undertaking and details of Equity Investment 22. Proof of Payment of RFP Fees 23. Bid Bond 24. Board Resolution as per Annexure 11 (If required)	

[**Note:** The checklist is not exhaustive. Bidders are required to submit all the information/documents as per requirement of RFP]

For and on behalf of Bidder

M/s. …….

……..
(Signature of authorized signatory)

ANNEXURE 17 – LIST OF BANKS

The list of banks shall include all Scheduled Commercial Banks as per Second Schedule of RBI Act-1934 and any amendments thereof.

Note:
The above list of banks is indicative and can be modified by the BPC as required and any such change shall not be construed as a deviation from this document.

ANNEXURE 18 - GRID MAP OF THE PROJECT

Transmission System for integration of Krishnagiri REZ Phase-I

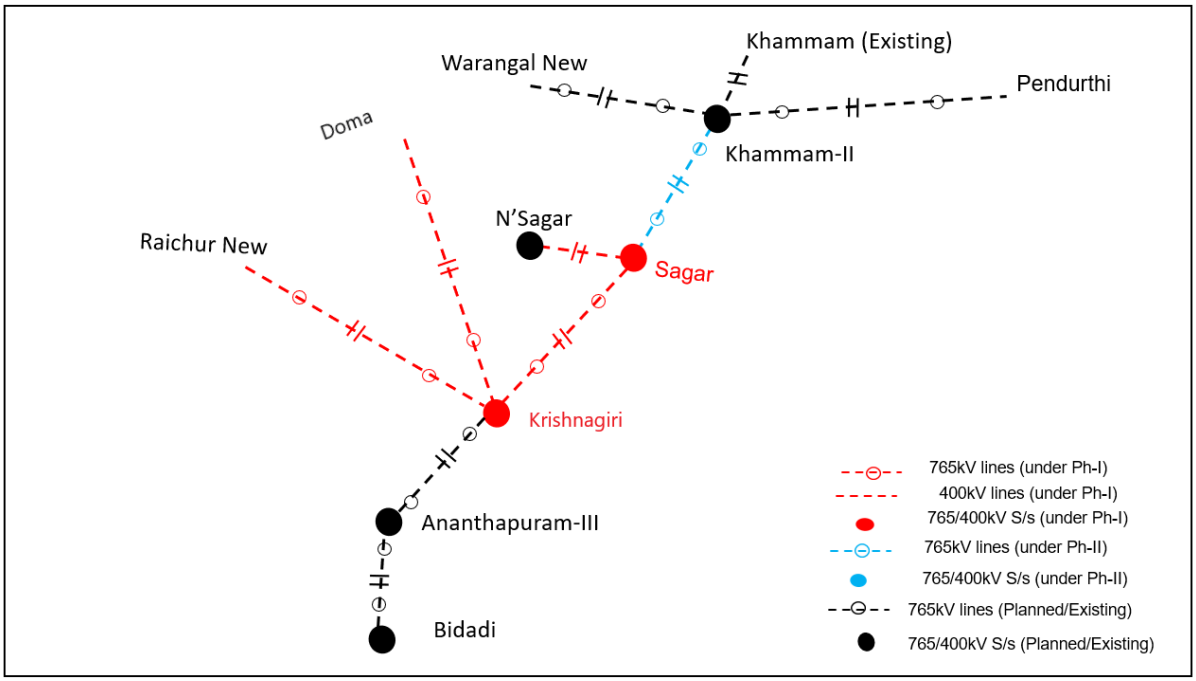

ANNEXURE 19 - FORMAT FOR CLARIFICATIONS / AMENDMENTS ON THE RFP / RFP PROJECT DOCUMENTS

S. No.	Name of the Document	Clause No. and Existing provision	Clarification required	Suggested text for the amendment	Rationale for the Clarification or Amendment

Signature ……

Name……..

For

Bidder's Rubber Stamp and Full Address.

(Note: This format shall be used for submission of requests for clarifications/ amendments on the draft RFP Project Documents as per the provisions of Clause 2.3.1)

ANNEXURE 20 - LIST FOR RFP PROJECT DOCUMENTS

ENCLOSURE 1: **TRANSMISSION SERVICE AGREEMENT (Provided separately)**

ENCLOSURE 2: **SHARE PURCHASE AGREEMENT (Provided Separately)**

…….

ANNEXURE 21 - FORMAT FOR FINANCIAL BID

[To be uploaded online]

Quoted Transmission Charges ……..

Notes

1. The Bidders are required to ensure compliance with the provisions of Clause 2.5.3 of this RFP.
2. Quotes to be in Rupees Millions and shall be up to two (2) decimal points.
3. The contents of this format shall be clearly typed.
4. The Financial Bid shall be digitally signed by the authorized signatory in whose name power of attorney as per Clause 2.5.2 is issued.
5. Ensure only one value for annual Transmission Charges is quoted. The same charge shall be payable every year to TSP for the term of TSA.

ANNEXURE 22 – FORMAT FOR AFFIDAVIT

[On non-judicial stamp paper. Foreign companies submitting bids are required to follow the applicable law in their country]

AFFIDAVIT

We [including any of our Affiliate and Consortium Member & any of its Affiliate], hereby declare that as on Bid Deadline:

a. the Bidder & any of its Affiliate including any Consortium Member & any of its Affiliate, their directors or key personnel have not been barred or included in the blacklist by any government agency or authority in India, the government of the jurisdiction of the Bidder or Members where they are incorporated or the jurisdiction of their principal place of business, any international financial institution such as the World Bank Group, Asian Development Bank, African Development Bank, Inter-American Development Bank, Asian Infrastructure Investment Bank etc. or the United Nations or any of its agencies; or

b. the Bidder & any of its Affiliate including any Consortium Member & any of its Affiliate or their directors have not been convicted of any offence in India or abroad.

We further declare that following investigations are pending / no investigation is pending [strike off whichever is not applicable] against us [including any of our Consortium Member or Affiliate or Parent or Ultimate Parent or Affiliate] or CEO or any of our directors/ manager/key managerial personnel of the Applicant /Consortium Member or their Affiliates.

We further undertake to inform the BPC of any such matter as mentioned above on its occurrence after the date of this affidavit till the Effective Date.

We undertake that, in case, any information provided in relation to this affidavit is found incorrect at any time hereafter, our BID / Letter of Intent / contract (if entered) would stand rejected / recalled / terminated, as the case may be.

…….
Signature and Name of the authorized signatory of the Bidding Company / Lead Member of the Bidding Consortium

……..
(Signature of Notary Public)

Place: ……
Date: ……

Note: In case any investigation is pending against the Applicant, including any Consortium Member or Affiliate, or CEO or any of the directors/ manager/key managerial personnel of the Applicant

/Consortium /Member or their Affiliates, full details of such investigation including the name of the investigating agency, the charge/offence for which the investigation has been launched, name and designation of persons against whom the investigation has been launched and other relevant information should be disclosed under this affidavit.

ANNEXURE A
Technical Details with respect to electronic bidding

Registration Methodology

In order to submit online bids in the e-bidding process for selection of Transmission Service Provider, interested Bidders are required to register themselves with the e-procurement website of MSTC limited namely www.mstcecommerce.com/eprochome/tsp/index.jsp. To register with the website, the Bidder is required to fill up the online form available under the link Register as Vendor in the above website and fill up the same and click on Submit.

During this process, the Bidder shall create his user id and password and keep note of the same. The Bidder shall ensure that the secrecy of his user id and password is maintained at all time and he/she shall alone be responsible for any misuse of the user id and password.

The Bidder may check the details entered by it before final submission. On successful submission of the online registration Form, the Bidder shall receive a confirmation mail in the registered email address advising the Bidder to submit the following documents.

i. Self-attested Income Tax PAN Card. In case of a registered Company or Firm, the Firm's PAN card and in case of a proprietorship firm, proprietor's personal PAN card is required. In case of partnership firm, PAN of the firm and that of the authorized partner are to be submitted.

ii. Copy of the confirmation email Letter received from MSTC after successful completion of on-line registration.

iii. A non-refundable registration fee of Rs.10,000/- plus GST as per applicable rate to be paid online. The account details will be available in the System generated email sent by MSTC post registration.

Please provide details of payment made like UTR No, remitting bank name, date of payment and amount in the covering letter.

The Bidder shall have to submit all the above documents to MSTC Limited for verification and activation of their login ids. The Bidders should send scanned copies of the above documents to the designated email id only which is given below.

tsp@mstcindia.co.in

It may be noted that Bidders need not visit any of the offices of MSTC Limited for submission of the documents.

Contact persons of MSTC Limited:

Ms. Rupali
9458704037

Mr. Setu Dutt Sharma
7878055855

Once the complete set of documents and requisite registration fee are received from a Bidder, MSTC shall activate the Bidder's login after verification / scrutiny of the documents. MSTC Limited reserves the right to call for additional documents from the Bidder if needed and the Bidder shall be obliged to submit the same.

On completion of the above stated registration process, a Bidder shall be able to login to MSTC's website.

ANNEXURE B
Draft Pre-Award Integrity Pact

GENERAL

This pre-bid contract Agreement (herein after called the Integrity Pact) is made on …….. day of the month of ……. 20……, between, on one hand, ……. [Insert name of BPC] through Shri …….. [Insert Name & designation of representative of BPC] (hereinafter called the "Bid Process Coordinator/ BPC", which expression shall mean and include, unless the context otherwise requires, his successors in the office and assigns) of the First Part and M/s …… represented by Shri …….. [Insert Name & Designation of Authorized Signatory of the Bidder/ Lead Member of Consortium] (hereinafter called the "Bidder" which expression shall mean and include, unless the context otherwise requires, his successors and permitted assigns) of the Second Part.

WHEREAS the BPC is conducting the bidding process for selection of bidder as Transmission Service Provider (TSP) for "**Transmission System for integration of Krishnagiri REZ Phase-I"**, who will be responsible to set up the transmission project on build, own, operate and transfer (BOOT) basis and to provide Transmission Service.

WHEREAS the Bidder is a Private Company/Public Company/Government Undertaking/ Partnership, constituted in accordance with the relevant law in the matter and the BPC is a Public Sector Undertaking (PSU) performing its function on behalf of the Ministry of Power, Government of India.

NOW, THEREFORE,

To avoid all forms of corruption by following a system that is fair, transparent and free from any influence/prejudiced dealings during the complete bidding process with a view to: -

Enabling the BPC to select the bidder as TSP in conformity with the defined procedures by avoiding the high cost and the distortionary impact of corruption on public procurement, and

Enabling Bidder to abstain from bribing or indulging in any corrupt practice in order to emerge as selected bidder by providing assurance to them that their competitors will also abstain from bribing and other practices and the BPC will commit to prevent corruption, in any form, by its officials by following transparent procedures.

The parties hereto hereby agree to enter into this Integrity Pact and agree as follows:

Commitments of BPC

1.1 The BPC undertakes that no official of the BPC, connected directly or indirectly with the bidding process, will demand, take a promise for or accept, directly or through intermediaries, any bribe, consideration, gift, reward, favour or any material or immaterial

benefit or any other advantage from the BIDDER, either for themselves or for any person, organization or third party related to the bidding process in exchange for an advantage in the bidding process, bid evaluation, contracting or implementation process related to the contract.

1.2 The BPC will, during the bidding stage, treat all bidders alike, and will provide to all bidders the same information and will not provide any such information to any particular bidder which could afford an advantage to that particular bidder in comparison to the other bidders.

1.3 All the officials of the BPC will report the appropriate Government office any attempted or completed breaches of the above commitments as well as any substantial suspicion of such a breach.

2. In case of any such preceding misconduct on the part of such official(s) is reported by the Bidder to the BPC with the full and verifiable facts and the same is *prima facie* found to be correct by the BPC, necessary disciplinary proceedings, or any other action as deemed fit, including criminal proceedings may be initiated by the BPC and such a person shall be debarred from further dealings related to the bidding process. In such a case while an enquiry is being conducted by the BPC the proceedings under the bidding process would not be stalled.

Commitments of Bidder

3. The Bidder commits itself to take all measures necessary to prevent corrupt practices, unfair means and illegal activities during any stage of its bid or during any pre award stage in order to emerge as Selected Bidder or in furtherance to secure it and in particular commits itself to the following: -

3.1 The Bidder will not offer, directly or through intermediaries, any bribe, gift, consideration, reward, favour, any material or immaterial benefit or other advantage, commission, fees, brokerage or inducement to any official of the BPC, connected directly or indirectly with the bidding process, or to any person, organization or third party related to the bidding process in exchange for any advantage in the bidding, evaluation, contracting and implementation of the bidding process.

3.2 The Bidder further undertakes that it has not given, offered or promised to give, directly or indirectly any bribe, gift, consideration, reward, favour, any material or immaterial benefit or other advantage, commission, fees, brokerage or inducement to any official of the BPC or otherwise in bidding process or for bearing to do or having done any act in relation to bidding process or any other contract with the Government for showing or forbearing to show favour or disfavour to any person in relation to the bidding process or any other contract with the Government.

3.3 The Bidder shall disclose the name and address of agents and representatives and Indian Bidder shall disclose their foreign principals or associates.

3.4 The Bidder shall disclose the payments to be made by them to agents/brokers or any other intermediary, in connection with this bid.

3.5 The Bidder further confirms and declares to the BPC that the Bidder has not engaged any individual or firm or company whether Indian or foreign to intercede, facilitate or in any way to recommend to the BPC or any of its functionaries, whether officially or unofficially for selection of Bidder as TSP, nor has any amount been paid, promised or intended to be paid to any such individual, firm or company in respect of any such intercession, facilitation or recommendation.

3.6 The Bidder, either while presenting the bid or during pre-award negotiations or before signing the Share Purchase Agreement, shall disclose any payments he has made, is committed to or intends to make to officials of the BPC or their family members, agents, brokers or any other intermediaries in connection with the bidding process and the details of services agreed upon for such payments.

3.7 The Bidder will not collude with other parties interested in the bidding process to impair the transparency, fairness and progress of the bidding process.

3.8 The Bidder will not accept any advantage in exchange for any corrupt practice, unfair means and illegal activities.

3.9 The Bidder shall not use improperly, for purpose of competition or personal gain, or pass on to others, any information provided by the BPC as part of the business relationship, regarding plans, technical proposal and business details, including information contained in any electronic data carrier. The Bidder also undertakes to exercise due and adequate care lest any such information is divulged.

3.10 The Bidder commits to refrain from giving any complaint directly or through any other manner without supporting it with full and verifiable facts.

3.11 The Bidder shall not instigate or cause to instigate any third person to commit any of the actions mentioned above.

3.12 The Bidder shall not lend to or borrow any money from or enter into any monetary dealings or transactions, directly or indirectly, with any employee of the BPC.

4. **Previous Transgression**

4.1 The Bidder declares that no previous transgression occurred in the last three years immediately before signing of this Integrity Pact, with any other company in any country in respect of any corrupt practices envisaged hereunder or with any Public Sector Enterprise in India or any Government Department in India that could justify Bidder's exclusion from the bidding process.

4.2 The Bidder agrees that if it makes incorrect statement on this subject, Bidder can be disqualified from the tender process or the contract, if already awarded, can be terminated for such reason.

5. **Bid Bond (Security Deposit)**

5.1 Along with the technical bid, the Bidder shall submit Bid Bond for an amount of **Rs.81.70 Crore (Rupees Eighty One Crore Seventy Lakh Only)** issued by any Banks from the list provided in RFP Document] as Earnest Money/Security Deposit, with the BPC.

5.2 The Earnest Money/Security Deposit shall be valid & retained by the BPC for such period as specified in the RFP Document.

5.3 No interest shall be payable by the BPC to the Bidder on Earnest Money/Security Deposit for the period of its currency.

6. **Sanctions for Violations**

6.1 Any breach of the aforesaid provisions by the Bidder or any one employed by it or acting on its behalf (whether with or without the knowledge of the Bidder) shall entitle the BPC to take all or anyone of the following actions, wherever required:-

(i) To immediately call off the pre-award negotiations without assigning any reason or giving any compensation to the Bidder. However, the proceedings with the other Bidder (s) would continue.

(ii) The Bid Bond (in pre-award stage) shall stand forfeited either fully or partially, as decided by the BPC and the BPC shall not be required to assign any reason therefore.

(iii) To immediately cancel the award, if already awarded, without giving any compensation to the Bidder.

(iv) To cancel all or any other contracts with the Bidder. The Bidder shall be liable to pay compensation for any loss or damage to the BPC resulting from such cancellation/rescission.-

(v) To debar the Bidder from participation in any tender or RFP issued by any BPC for an

indefinite period.

(vi) To recover all sums paid in violation of this Pact by Bidder to any middleman or agent or broker with a view to securing the award.

6.2 The BPC will be entitled to take all or any of the actions mentioned at para 6.1 (i) to (vi) of this Pact also on the Commission by the Bidder or anyone employed by it or acting on its behalf (whether with or without the knowledge of the Bidder), of an offence as defined in Chapter IX of the Indian Penal code, 1860 or Prevention of Corruption Act, 1988 or any other statute enacted for prevention of corruption.

6.3 The decision of the BPC to the effect that a breach of the provisions of this Pact has been committed by the Bidder shall be final and conclusive on the Bidder. However, the Bidder can approach the Independent Monitor(s) appointed for the purposes of this Pact.

7. **Independent Monitors**

7.1 The BPC has appointed Independent Monitors (hereinafter referred to as Monitors) for this Pact in consultation with the Central Vigilance Commission (Names and Addresses of the Monitors to be given).

Shri Sanjiv Garg IRTS (Retd.)
A-14/1, Vasant Vihar, New Delhi-110057
Mob No – 9818798390
Email ID: sanjivgarg.iem@gmail.com

Shri Jeyakodi Virusankulam Kumarasamy, IAS (Retd.)
R/o 3F, Orchid Villa, 6" Avenue,
Harrington Road, Chetpet,
Chennai-600031
Mob No – 9176699444
Email ID: jeyakodivk@gmail.com

7.2 The task of the Monitors shall be to review independently and objectively, whether and to what extent the parties comply with the obligations under this Pact.

7.3 The Monitors shall not be subject to instructions by the representatives of the parties and perform their functions neutrally and independently.

7.4 Both the parties accept that the Monitors have the right to access all the documents relating to the project/procurement, including minutes of meetings.

7.5 As soon as the Monitor notices, or has reason to believe, a violation of this Pact, he will so inform the Authority designated by the BPC.

7.6 The Bidder accepts that the Monitors has the right to access without restriction to all Project

documentation of the BPC including that provided by the Bidder. The Monitor shall be under contractual obligation to treat the information and documents of the Bidder /Subcontractors(s) with confidentially. [As all the bid documents are with BPC only]

7.7 The BPC will provide to the Monitors sufficient information about all meetings among the parties related to the Project provided such meetings could have an impact on the contractual relations between the parties. The parties will offer to the monitor the option to participate in such meetings.

7.8 The Monitor will submit a written report to the designated Authority of the BPC/Secretary in the Department within 8 to 10 weeks from the date of reference or intimation to him by the BPC / Bidder and, should the occasion arise, submit proposals for correcting problematic situations.

8. **Facilitation of Investigation**

In case of any allegation of violation of any provisions of this Pact or payment of commission, the BPC or its agencies shall be entitled to examine all the documents including the Books of Accounts of the Bidder and the Bidder shall provide necessary information and documents in English and shall extend all possible help for the purpose of such examination.

9. **Law and Place of Jurisdiction**

This Pact is subject to Indian Law. The place of performance and jurisdiction is the seat of the BPC.

10. **Other Legal Actions**

The actions stipulated in this Integrity Pact are without prejudice to any other legal action that may follow in accordance with the provisions of the any extent law in force relating to any civil or criminal proceedings.

11. **Validity**

11.1 The validity of this Integrity Pact shall be from date of its signing and up to 6 months from the date of transfer of project specific SPV i.e., signing of Share Purchase Agreement with BPC. In case Bidder is unsuccessful, this Integrity Pact shall expire after 15 days from the date of transfer of project specific SPV to successful bidder.

11.2 Should one or several provisions of this Pact turn out to be invalid, the remainder of this Pact shall remain valid. In this case, the parties will strive to come to an agreement to their original intentions.

12. The Parties hereby sign this Integrity Pact at _____on

ANNEXURE-C

LOCATION DETAILS OF EXISTING / PLANNED SUBSTATIONS

a) **Krishnagiri 765/400/220 kV PS:**

New substation which is to be implemented under present scheme

b) **Sagar 765/400 kV S/s:**

New substation which is to be implemented under present scheme

c) **Nagarjuna Sagar 400/220 kV S/s:** 16° 30.644'N, 79° 23.209'E

d) **Raichur New 765/400 kV S/s:** 16°12'6.47"N, 77°17'16.50"E

e) **Doma 765/400 kV S/s:** New substation which is presently under bidding.

Note: *The above coordinates/location of substation indicated is approximate in the substation area. Exact coordinates for the corresponding bays/gantry for termination of the respective line may be verified & finalized in coordination with actual site.*

SPECIFIC TECHNICAL REQUIREMENTS FOR TRANSMISSION LINE

The design, routing and construction of transmission lines shall be in accordance with Chapter V, Part A of CEA (Technical Standards for Construction of Electrical Plants and Electric Lines) Regulations 2022, as amended from time to time. Other CEA Regulations/ guidelines as amended up to date and Ministry of Power (MoP) guidelines, as applicable, shall also be followed.

A.1.0 Selection of tower type shall be made as per CEA Regulations, however, in case lattice type towers are used, the following shall also be applicable:

A.2.0 Steel section of grade E 250 and/or grade E 350 as per IS 2062, only are permitted for use in towers, extensions, gantry structures and stub setting templates. For towers in snowbound areas, steel sections shall conform to Grade-C of IS-2062.

A.3.0 Towers shall be designed as per IS-802:2015, however the drag coefficient of the tower shall be as follows: -

Solidity Ratio	Drag Coefficient
Up to 0.05	3.6
0.1	3.4
0.2	2.9
0.3	2.5
0.4	2.2
0.5 and above	2.0

A.4.0 Transmission Service Provider (TSP) shall adopt any additional loading/ design criteria for ensuring reliability of the line, if so desired and /or deemed necessary.

A.5.0 Transmission line shall be designed considering wind zones as specified in wind map given in National Building Code 2016, Vol.1. The developer shall also make his own assessment of local wind conditions and frequent occurrences of High Intensity Winds (HIW) due to thunderstorms, dust storms, downburst etc. along the line route and wherever required, higher wind zone than that given in wind map shall be considered for tower design for ensuring reliability of line. Further, for transmission line sections passing within a distance of 50 km from the boundary of two wind zones, higher of the two wind zones shall be considered for design of towers located in such sections.

A.6.0 Selection of reliability level for design of tower shall be as per CEA Regulation (Technical Standards for Construction of Electrical Plants and Electric Lines) Regulations 2022, as amended from time to time.

A.7.0

a) In case of construction of transmission line of Voltage level 400 kV and above, under crossing of the existing transmission line shall not be allowed. In the case where it is inevitable to under-cross the existing transmission line then TSP shall seek prior approval from Chief Electrical Inspector, CEA with detailed study ensuring that all statutory electrical clearances and Electric Field limit of 10 kV/m at 1 m and 1.8 m from ground level is not

violated.

b) For power line crossing of 400 kV or above voltage level, large angle and dead end towers (i.e. D/DD/QD) shall be used on either side of power line crossing.

c) For power line crossing of 132 kV and 220 kV (or 230 kV) voltage level, angle towers (B/C/D/DB/DC/DD/ QB/QC/QD) shall be used on either side of power line crossing depending upon the merit of the prevailing site condition and line deviation requirement.

d) For power line crossing of 66 kV and below voltage level, suspension/tension towers shall be provided on either side of power line crossing depending upon the merit of the prevailing site condition and line deviation requirement.

e) For crossing of railway tracks, national highways and state highways, the rules/ regulations of appropriate authorities shall be followed.

A.8.0 The relevant conductor configuration shall be as follows: -

A. For the following 765 kV lines under the scheme:

i. Krishnagiri – Doma 765 kV D/C line

ii. Krishnagiri – Raichur New 765 kV D/C line

iii. Krishnagiri – Sagar 765 kV D/C line

Type of conductor: ACSR / AAAC / AL59

Basic Parameters:

Transmission line	**ACSR Conductor specified**	**Equivalent AAAC conductor based on 53.5% conductivity of Al Alloy**	**Equivalent minimum size of AL59 conductor based on 59% conductivity of AL Alloy***	**Sub-conductor Spacing**
765 kV D/C (Hexa Bundle) Transmission Lines	**Zebra : Stranding** 54/3.18 mm-Al + 7/3.18 mm-Steel, 428.9 mm^2, Aluminium area, 28.62 mm diameter Maximum DC Resistance at 20°C (Ω/km): 0.0677	**Stranding details:** 61/3.19 mm, 487.5 mm^2 Aluminium alloy area 28.71 mm diameter Maximum DC Resistance at 20°C (Ω/km): 0.06815	**Stranding details:** 61/3.08 mm, 454 mm^2 Aluminium alloy area 27.72 mm diameter Maximum DC Resistance at 20°C (Ω/km): 0.0653	457 mm

Transmission line	ACSR Conductor specified	Equivalent AAAC conductor based on 53.5% conductivity of Al Alloy	Equivalent minimum size of AL59 conductor based on 59% conductivity of AL Alloy*	Sub-conductor Spacing
	Minimum UTS: 131.44 kN	Minimum UTS: 135.6 kN	Minimum UTS: 108 kN	

B. For Sagar – Nagarjunasagar 400 kV quad D/C line

Type of conductor: ACSR / AAAC / AL59

Basic Parameters:

Transmission line	ACSR Conductor specified	Equivalent AAAC conductor based on 53%conductivity of Al Alloy	Equivalent minimum size of AL59 conductor based on 59% conductivity of AL Alloy*	Sub-conductor Spacing
400 kV D/C (Quad Bundle) Transmission Lines	**Moose: Stranding** 54/3.53mm-Al + 7/3.53 mm- Steel, 31.77 mm diameter 528.5 mm^2, Aluminium area, Maximum DC Resistance at 20°C (Ω/km): 0.0549 Minimum UTS: 159.60 kN	**Stranding details:** 61/3.55 mm 31.95 mm diameter; 604 mm^2 Aluminium alloy area Maximum DC Resistance at 20°C (Ω/km): 0.05506 Minimum UTS: 159.80 kN	**Stranding details:** 61/3.31 mm 29.79 mm diameter; 525 mm^2 Aluminium alloy area Maximum DC Resistance at 20°C (Ω/km): 0.0566 Minimum UTS: 124.70 kN	457 mm

Note:

1. **To select any size above the minimum, the sizes mentioned in the Indian standard IS-398 (part-6) shall be followed.*
2. *The transmission lines shall have to be designed for a maximum operating conductor temperature of 85 ^{O}C.*

A.9.0 The required phase to phase spacing and horizontal spacing for 765 kV and 400 kV line(s) shall be governed by the tower design as well as minimum live metal clearances for 765 kV and 400

kV voltage level under different insulator swing angles. However, the phase to phase spacing for 765 kV line shall not be less than 15 m and for 400 kV line shall not be less than 8 m.

A.10.0 All electrical clearances including minimum live metal clearance, ground clearance and minimum mid span separation between earth wire and conductor as given below shall be considered:

I. Minimum live metal clearances for 765 kV line:

a) (i) Under stationary conditions

From tower body: For 765 kV D/C: 6.1 m

For 765 kV S/C: 5.6 m

(ii) Under swing conditions

Wind Pressure Condition	Minimum Electrical Clearance
a) Swing angle (25º)	4.4 m
b) Swing angle (55º)	1.3 m

(iii) Minimum ground clearance for 765 kV line: 18 m

(iv) Minimum mid span separation between earth-wire and conductor for 765 kV line: 9.0 m

II. Minimum live metal clearances for 400 kV line:

(i) Under Stationary Conditions

From tower body: 3.05 m

(ii) Under Swing Conditions

Wind pressure Condition	Minimum electrical clearance
a) Swing angle (22º)	3.05 m
b) Swing angle (44º)	1.86 m

(iii) Minimum ground clearance for 400 kV line: 8.84 m

(iv) Minimum mid span separation between earth-wire and conductor for 400 kV line: 9.0 m

A.11.0 The Shielding angle shall not exceed 10 deg for 765 kV D/C and 20 deg for 400 kV D/C Line transmission line.

A.12.0 The Fault current for design of line shall be 50 kA for 1 sec for 765 kV and 63 kA for 1 sec for 400 kV.

A.13.0 In case of 400 kV and above voltage class lines, at least one out of two earth wires shall be OPGW and second earth wire, if not OPGW, shall be either of Galvanized Stranded Steel (GSS) or Aluminum Alloy Conductor Steel Reinforced (AACSR) conductor type or any other suitable conductor type depending upon span length and other technical consideration.

A.14.0 Each tower shall be earthed such that tower footing impedance does not exceed 10 ohms. Pipe type or Counterpoise type earthing shall be provided in accordance with relevant IS. Additional earthing shall be provided on every 7 to 8 km distance for direct earthing of both shield wires. If

site condition demands, multiple earthing or use of earthing enhancement compound shall be used.

A.15.0 Pile type foundation shall be used for towers located in river or creek bed or on bank of river having scourable strata or in areas where river flow or change in river course is anticipated, based on detailed soil investigation and previous years' maximum flood discharge of the river, maximum velocity of water, highest flood level, scour depth and anticipated change in course of river based on river morphology data of at least past 20 years to ensure availability and reliability of the transmission line.

A.16.0 Transmission line route shall be finalized, in consultation with appropriate authorities so as to avoid the habitant zones of endangered species and other protected species. Bird diverters, wherever required, shall be provided on the transmission line. In order to optimize the route, use of GATISHAKTI platform shall also be made.

A.17.0 Wherever, transmission lines are passing through cyclone prone areas i.e., areas up to 60 km from coast following shall also be applicable:

a) Terrain category-I, with terrain roughness factor (K2) of 1.08 shall be considered for tower design for exposed open terrain with few or no obstruction, which also includes open sea coasts, open stretch of water, desert and flat treeless plains.

b) Importance factor for cyclonic region (K4) of 1.3 shall be considered for tower design.

c) The number of consecutive spans between the section points/ angle point shall not exceed 10 spans or 3 km instead of conventional practice of 15 spans or 5 km, in order to reduce the failure of such towers in coastal areas due to cascading effect. The section shall be terminated with tension tower/ angle tower and angle of deviation should be based on the site requirement.

A.18.0 Wherever, transmission lines are passing through cyclone prone areas (i.e. areas up to 60 km from coast)/ creek regions/ aggressive soil areas following shall also be applicable:

a) The fabricated tower parts and stubs shall have a minimum overall zinc coating of 900 g/m^2 of surface area except for plates and sections below 5 mm which shall have a minimum overall zinc coating of 610 g/m^2 of surface area. The average zinc coating for all sections and plates 5 mm and above shall be maintained as 127 microns and that for plates and sections below 5 mm shall be maintained as 87 microns.

b) Ready mix concrete of M30 Grade shall be used to avoid use of locally available saline water. However, design mix concrete of M30 Grade conforming to IS 456 with potable water can be used at locations where transportation of ready-mix concrete is not feasible. Minimum cement content in any case shall not be less than 330 kg/m^3.

c) The surface of the reinforced steel shall be treated with epoxy-based coating to enhance corrosion performance of foundation. Use of epoxy coated reinforcement in foundation shall be as per IS 13620. In addition, two (2) coats of bituminous painting of minimum 1.6 kg/m^2 per coat shall be applied on all exposed faces of foundation (i.e. pedestal and base slab).

d) Double coat 20 mm thick cement plaster shall be provided on all exposed concrete

surface as well up to 300 mm below ground level to give protection to concrete surface from environmental and saline effect.

e) Before coping of chimney top portion, three coats of anti-corrosive paint of minimum 30-35 microns dry film thickness each shall be applied on the stub in the 50 mm coping portion as well as up to 350 mm above CL portion.

A.19.0 The raised chimney foundation is to be provided in areas prone to flooding/water stagnation like paddy field /agricultural field and undulated areas to avoid direct contact of water with steel part of tower. The top of the chimney of foundation should be at least above High Flood Level (HFL) or the historical water stagnation/ logging level (based on locally available data) or above High Tide Level or 500 mm above Natural Ground level (whichever is higher).

A.20.0 Routing of transmission line through protected areas of India shall be avoided to the extent possible. In case, it is not possible to avoid protected areas, the towers of the transmission line up to 400 kV level, which are installed in protected areas shall be designed for Multi-circuit (4 circuits) configuration of same voltage level considering reliability level of at least two (2). The top two circuits of these multi-circuit towers shall be used for stringing of the transmission line under present scope and the bottom two circuits shall be made available for stringing of any future transmission line of any transmission service providers/ State transmission utilities/Central transmission utilities passing through the same protected area. Further, the configuration and coordinates of such transmission towers shall be submitted to CEA, CTU and BPC by the TSP.

A.21.0 The TSP shall abide by the Guidelines of CEA w.r.t. shifting of transmission lines for NHAI projects and other projects.

A.22.0 Safety precautions in regards to gas/oil pipelines in vicinity of Transmission lines shall be taken in coordination with gas/ petroleum authorities.

A.23.0 The stringing of the transmission line in forest area shall be carried out through drones.

A.24.0 The tower shall be designed considering the porcelain Insulators with creepage factor of 31 mm/ kV irrespective of type of insulator used.

A.25.0 RoW width and Span in different terrain shall be as per Schedule VII of CEA (Technical Standards for Construction of Electrical plants and Electric Lines) Regulations 2022, as amended from time to time.

SPECIFIC TECHNICAL REQUIREMENTS FOR SUBSTATION

The proposed **Krishnagiri PS and Sagar S/s** shall be conventional Air Insulated Substation (AIS) type conforming to the requirements of CEA (Technical Standards for Construction of Electrical Plants and Electric Lines) Regulations, 2022, as amended from time to time.

Extension of proposed **Raichur New S/s, Doma S/s and Nagarjunasagar S/s** shall be conventional AIS type conforming to the requirements of CEA (Technical Standards for Construction of Electrical Plants and Electric Lines) Regulations 2022, as amended from time to time.

Other CEA Regulations/guidelines as amended up to date and MoP guidelines, as applicable, shall also be followed.

B.1.0 Salient features of Substation Equipment and Facilities

The design and specification of substation equipment are to be governed by the following factors:

B.1.1 Insulation Coordination

The system design parameters for substations/switchyards shall be as given below:

S. No.	Description of parameters	765/400/220 kV Krishnagiri PS (AIS)			Raichur New (AIS)
		765 kV System	**400 kV System**	**220 kV System**	**765 kV System**
1.	System Operating Voltage	765 kV	400 kV	220 kV	765 kV
2.	Maximum voltage of the system (rms)	800 kV	420 kV	245 kV	800 kV
3.	Rated Frequency	50 Hz	50 Hz	50 Hz	50 Hz
4.	No. of Phases	3	3	3	3
5.	Rated Insulation Levels				
i)	Lightning Impulse withstand voltage for (1.2/50 micro sec.) - for Equipment other than Transformer and Reactor - for Insulator String	 2100 kVp 2100 kVp	 1425 kVp 1550 kVp	 1050 kVp 1050 kVp	 2100 kVp 2100 kVp
ii)	Switching Impulse withstand voltage (250/2500 micro sec.) dry and wet	1550 kVp	1050 kVp	--	1550 kVp
iii)	One minute power frequency dry withstand voltage (rms)	830 kV	630 kV	--	830 kV

iv)	One minute power frequency dry and wet withstand voltage (rms)	--	--	460 kV	--
6.	Corona Extinction Voltage	508 kV	320 kV	--	508 kV
7.	Max. radio interference voltage for frequency between 0.5 MHz and 2 MHz	2500 micro-volts at 508 kV rms	1000 micro-volts at 266 kV rms	1000 micro-volts at 156 kV rms	2500 micro-volts at 508 kV rms
8.	Minimum creepage distance for insulator string/ longrod insulators/ outdoor bushings	24800 mm (31mm/kV)	13020 mm (31 mm/kV)	7595 mm (31 mm/kV)	24800 mm (31mm/kV)
9.	Minimum creepage distance for switchyard equipment	20000 mm (25 mm/kV)	10500 mm (25 mm/kV)	6125 mm (25 mm/kV)	20000 mm (25 mm/kV)
10.	Max. Fault Current	50 kA	63 kA	50 kA	50 kA
11.	Duration of Fault	1 sec	1 sec	1 sec	1 sec

S. No.	**Description of parameters**	**Sagar S/s (AIS)**		**Doma S/s (AIS) Extn.**	**Nagarjunasagar S/s (AIS) Extn.**
		765 kV System	**400 kV System**	**765 kV System**	**400 kV System**
1.	System Operating Voltage	765 kV	400 kV	765 kV	400 kV
2.	Maximum voltage of the system (rms)	800 kV	420 kV	800 kV	420 kV
3.	Rated Frequency	50 Hz	50 Hz	50 Hz	50 Hz
4.	No. of Phases	3	3	3	3
5.	Rated Insulation Levels				
i)	Lightning Impulse withstand voltage for (1.2/50 micro sec.) - for Equipment other than Transformer and Reactor - for Insulator String	2100 kVp 2100 kVp	1425 kVp 1550 kVp	2100 kVp 2100 kVp	1425 kVp 1550 kVp
ii)	Switching Impulse withstand voltage (250/2500 micro sec.) dry and wet	1550 kVp	1050 kVp	1550 kVp	1050 kVp
iii)	One minute power frequency dry withstand voltage (rms)	830 kV	630 kV	830 kV	630 kV
6.	Corona Extinction Voltage	508 kV	320 kV	508 kV	320 kV
7.	Max. radio interference voltage for frequency between 0.5 MHz and 2 MHz	2500 micro-volts at 508 kV rms	1000 micro-volts at 266 kV rms	2500 micro-volts at 508 kV rms	1000 micro-volts at 266 kV rms

8.	Minimum creepage distance for insulator string/ longrod insulators/ outdoor bushings	24800 mm (31 mm/kV)	13020 mm (31 mm/kV)	24800 mm (31 mm/kV)	13020 mm (31 mm/kV)
9.	Minimum creepage distance for switchyard equipment	20000 mm (25 mm/kV)	10500 mm (25 mm/kV)	20000 mm (25 mm/kV)	10500 mm (25 mm/kV)
10.	Max. Fault Current	50 kA	63 kA	50 kA	63 kA
11.	Duration of Fault	1 sec	1 sec	1 sec	1 sec

B.1.2 Switching Scheme

The switching schemes, as mentioned below, shall be adopted at various voltage levels of substation/switchyard:

Substation	765 kV side	400 kV side	220 kV side
765/400/220 kV Krishnagiri PS (AIS)	One and Half breaker	One and Half breaker	Double Main and Transfer
765/400 kV Sagar S/s (AIS)	One and Half breaker	One and Half breaker	-----
Doma S/s (AIS) Extn.	One and Half breaker	-----	-----
Raichur New (AIS) Extn.	One and Half breaker	-----	-----
Nagarjunasagar S/s (AIS) Extn.	-----	One and Half breaker	-----

Notes: -

i) For one and half breaker switching scheme, any double circuit line consisting of two numbers of feeders and originating from the same transmission or generating switchyard shall not be terminated in one diameter.

ii) Two transformers of same HV rating shall not be connected in the same diameter and similarly two bus reactors of same HV rating shall also not be connected in the same diameter.

iii) A diameter in one and half breaker scheme is a set of 3 circuit breakers with associated isolators, earth switches, current transformers etc. for controlling 2 (two) numbers of feeders.

iv) Connection arrangement of Switchable Line reactors shall be such that it can be used as Line reactor as well as Bus reactor with suitable NGR bypass arrangement.

v) Space for 765 kV and 400 kV future line bays shall be kept considering provision of switchable line reactors.

vi) ***Provision for Bus sectionalizer:***

Space/provision for One (1) set of bus sectionalizer for 400 kV shall comprise Two (2) Nos. of bus sectionalizer bays with associated Circuit Breakers, Isolators and Current Transformers for both buses.

Space/provision for One (1) set of bus sectionalizer for 220 kV shall comprise Two (2) Nos. of bus sectionalizer bays with associated Circuit Breakers, Isolators and Current Transformers for both buses.

vii) TSP shall plan connectivity of line and transformer feeders to bus bar in such a way that all power can be evacuated successfully without crossing thermal limit at any point of bus-bar.

viii) For AIS type substation, TSP shall keep space provisions for future elements such that interconnection arrangement to the corresponding future bays can be done with overhead AIS type connection without any cable/ GIS duct.

ix) **765/400/220 kV Krishnagiri PS:**

400 kV Bus Sectionalization shall be with the following feeder distribution.

400 kV Bus Section-1	***400 kV Bus Section-2 (Future)***
a) 3 Nos. of Present 765/400 kV ICT b) 5 Nos. of Present 400/220 kV ICT c) 1 No. of Present ± 300 MVAr STATCOM d) *4 Nos. of Future 400/220 kV ICT* *e) 6 Nos. of Future 400 kV Lines (with provision for Switchable line reactor)*	a) 1 Nos. of Present 765/400 kV ICT b) *2 Nos. of Future 765/400 kV ICT* *c) 9 Nos. of Future 400/220 kV ICT* *d) 6 Nos. of Future 400 kV Lines (with provision for Switchable line reactor)*

TSP shall implement 400 kV bays keeping the space provision for providing 400 kV Bus Sectionalizer in future meeting the requirements of feeder distribution as mentioned above.

220 kV Bus Sectionalization shall be with the following feeder distribution.

220 kV Bus Section-1	***220 kV Bus Section-2***
a) 4 Nos. of Present 400/220 kV ICT b) 5 Nos. of Present 220 kV Lines c) *1 No. future 220 kV Line.*	*a)* 1 No. of Present 400/220 kV ICT *b)* 1 Nos. of Present 220 kV Line *c) 3 Nos. future 400/220 kV ICT* *d) 5 Nos. future 220 kV Line.*
220 kV Bus Section-3 (Future)	***220 kV Bus Section-4 (Future)***
a) 5 Nos. future 400/220 kV ICT. *b) 7 Nos. future 220 kV Lines.*	*a) 5 Nos. future 400/220 kV ICT.* *b) 6 Nos. future 220 kV Lines.*

Line bays shall be complete along with line side equipment (such as LA, CVT, Wave Trap), gantry, protection panel etc. for termination of 220 kV lines for interconnection of RE Generation Projects.

x) **765/400 Sagar S/s (AIS)**

Provision of 400 kV Bus Sectionalization (Future) and space provision shall be with the following feeder distribution.

400 kV Bus Section-1	***400 kV Bus Section-2 (Future)***
a) 3 Nos. of Present 765/400 kV ICT b) 2 Nos. of Present 400 kV Lines *c) 5 Nos. of Future 400/220 kV ICT* *d) 4 Nos. of Future 400 kV Lines (with provision for Switchable line reactor)*	*a) 3* Nos*. of Future 765/400 kV ICT* *b) 5* Nos*. of Future 400/220 kV ICT* *c) 6* Nos*. of Future 400 kV Lines (with provision for Switchable line reactor)*

xi) **400 kV Nagarjunasagar S/s:** Sagar – Nagarjunasagar 400 kV D/C line shall be terminated in the line bays being constructed by POWERGRID.

xii) **765 kV Doma S/s:** Krishnagiri – Doma 765 kV D/C line shall be terminated in 2 Nos. of existing diameters (under implementation in separate scheme "Transmission System for Kurnool-IV REZ - Phase-II (3 GW)") for which Main bays shall be constructed under present scope.

xiii) **765 kV Raichur S/s:** Refer SLD-C.ENGG/TBCB/KOPPAL-II PART-B/RAICHUR/SLD/01 attached, Krishnagiri – Raichur 765 kV D/C line is to be terminated in the existing bays (Main Bay Nos. 709 and 718).

xiv) In one and half breaker scheme, both main bay and tie bay shall be completed for controlling a feeder. Further, all associated interconnection work shall also be in the present scope of TSP.

B.2.0 Substation Equipment and Facilities (Voltage level as applicable):

The switchgear shall be designed and specified to withstand operating conditions and duty requirements. All equipment shall be designed considering the following capacity.

S. No.	**Description of Bay**	**765/400/220 kV Krishnagiri PS**		
		765 kV	**400 kV**	**220 kV**
1.	Bus Bar	4000 A	4000 A	3000 A
2.	Line bay	3150 A	N/A	1600 A
3.	ICT bay	3150 A	3150 A	1600 A
4.	Reactor bay	3150 A	N/A	N/A
5.	Bus Sectionaliser bay	N/A	N/A	3000 A
6.	Bus Coupler Bay	N/A	N/A	3000 A
7.	Transfer Bus coupler bay	N/A	N/A	1600 A
8.	STATCOM Bay	N/A	3150 A	N/A

S. No	Description of Bay	765/400 kV Sagar S/s		Doma S/s	Raichur New S/s	Nagarjunasagar S/s
		765 kV	400 kV	765 kV	765 kV	400 kV
1.	Bus Bar	4000 A	4000 A	4000 A	4000 A	4000 A
2.	Line bay	3150 A	3150 A	3150 A	3150 A	3150 A
3.	ICT bay	3150 A	3150 A	N/A	N/A	N/A
4.	Reactor bay	3150 A	N/A	N/A	N/A	N/A

B.2.1 (765/√3)/(400/√3)/33 kV, Single Phase Autotransformer

500 MVA, (765/√3)/ (400/√3)/ 33 kV, 1-phase Autotransformer (including arrangement for 3-phase bank formation of 1500 MVA) shall conform to CEA's "Standard Specifications and Technical Parameters for Transformers and Reactors (66 kV and above Voltage Class)" as amended up to date available on CEA's website.

Spare 1-phase Transformer unit shall be placed and connected in such a way that the spare unit can be utilized to replace in case of fault in any unit of any of the transformer banks (including for future transformer banks) without physically moving it.

B.2.2 400/220/33 kV, 3-phase Autotransformer

500 MVA, 400/220/33 kV, 3-phase autotransformer shall conform to CEA's "Standard Specifications and Technical Parameters for Transformers and Reactors (66 kV and above Voltage Class)" as amended up to date available on CEA's website.

B.2.3 (765/√3) kV, Single Phase Shunt Reactor

80 MVAR and 110 MVAR, 765/√3 kV, 1-Phase Reactor (including arrangement for 3-phase bank formation of 240 MVAr and 330 MVAr, respectively) shall conform to CEA's "Standard Specifications and Technical Parameters for Transformers and Reactors (66 kV and above voltage class)" as amended up to date available on CEA's website..

Spare 1-phase Shunt Reactor unit shall be placed and connected in such a way that the spare unit can be utilized for all the bus and switchable line reactor banks (including for future reactor banks) without its physical movement.

Neutral Grounding Reactor and Surge Arrester for 765 kV Switchable Line Reactors (as applicable):

The neutral of the switchable line reactors (wherever provided) shall be grounded through adequately rated Neutral Grounding Reactors (NGR) to facilitate single phase auto-reclosure, provided that the NGR shall be provided with suitable bypass arrangement so that the switchable line reactor can be used as bus reactor as and when required. The neutral of bus reactor shall be solidly grounded.

NGR shall be oil filled or dry type air core for outdoor application. NGR shall conform to CEA's "Standard Specifications and Technical Parameters of Transformers and Reactors (66 kV and above Voltage Class)", as amended up to date. Technical parameters of NGR shall be as specified

in Annexure-A of above-mentioned document.

The surge arresters (rated voltage of arrester in co-ordination with ohmic value of NGR shall be decided by the TSP) shall be provided and physically located between the neutral of shunt reactor (brought out at 145 kV class bushing) and neutral grounding reactor. The surge arresters shall be of Station Medium (SM) class duty gapless Metal Oxide (ZnO) type conforming in general to IEC-60099-4. Arresters shall be hermetically sealed units, of self-supporting construction, suitable for mounting on structures.

The Ohmic value of NGR for Line Reactors shall be as follows:

Sl. No.	Line Name	Substation Name	NGR value (Ohm)
1.	Krishnagiri – Doma 765 kV D/C line with 240 MVAR SLR (convertible) at both end on both circuits	Krishnagiri	500
		Doma	500
2.	Krishnagiri – Raichur New 765 kV D/C line with 240 MVAR SLR (convertible) at Raichur New end on both circuits	Raichur New	500
3.	Krishnagiri – Sagar 765 kV D/C line with 240 MVAR SLR (convertible) at both end on both circuits	Krishnagiri	500
		Sagar	500

B.2.4 765 kV, 400 kV and 220 kV AIS Substation equipment (as applicable)

B.2.4.1 Circuit Breakers (AIS)

The circuit breakers and accessories shall conform to IEC: 62271-100, IEC: 62271-1 and shall be of SF_6 Type. The circuit breakers shall be of class C2-M2 (as per IEC) with regard to restrike probability during capacitive current breaking and mechanical endurance. The rated break time shall not exceed 40 ms for 765 kV and 400 kV circuit breakers and 60 ms for 220 kV circuit breakers. The 765 kV, 400 kV and 220 kV circuit breakers shall be provided with single phase and three phase auto reclosing. Each breaker would have two sets of trip circuits, which would be connected to separate DC supplies for greater reliability. The circuit breakers controlling 765 kV lines shall be provided with either pre-insertion closing resistor of about 450 ohm maximum with 9 ms insertion time or with Controlled Switching Device. The Circuit breakers controlling 400 kV lines shall be provided with either pre insertion closing resistor of about 400 ohm with 8 ms insertion time or with Controlled Switching Device (CSD) for lines longer than 200 km length. The short line fault capacity shall be same as the rated capacity and this is proposed to be achieved without use of opening resistors. The Controlled Switching Device shall be provided in circuit breakers of switchable line reactor bay and in Main and Tie bay circuit breakers of line with non-switchable line reactors, Bus Reactors and Transformers of 400 kV and above voltage class.

B.2.4.2 Isolators (AIS)

The Isolators shall comply with IEC 62271-102 in general. 765 kV Isolator design shall be double break or vertical break or knee-type. 400 kV and 220 kV Isolators shall be double break type. All Isolators and earth switches shall be motor operated. Earth switches shall be provided at various locations to facilitate maintenance. Isolator rated for 400 kV and 220 kV shall be of extended mechanical endurance class – M2 as per IEC-62271-102. Isolator rated for 220 kV shall be suitable for bus transfer current switching duty as per IEC-62271-102. Main blades and earth blades shall be interlocked and interlock shall be fail safe type. The 765 kV, 400 kV and 220 kV earth switch for line isolator shall be suitable for induced current switching duty as defined for Class-B.

B.2.4.3 Current Transformers (AIS)

Current Transformers shall comply with IEC 61869 in general. All ratios shall be obtained by secondary taps only. Generally, Current Transformers (CT) for 765 kV and 400 kV shall have six cores (four for protection and two for metering) and 220 kV Current Transformers shall have five cores (four for protection and one for metering). The burden and knee point voltage shall be in accordance with the requirements of the system including possible feeds for telemetry. The accuracy class for the protection core shall be PX and for the metering core it shall be 0.2S. The rated burden of cores shall be closer to the maximum burden requirement of the metering and protection system (not more than 20 VA for metering core) for better sensitivity and accuracy. The instrument security factor shall be less than five (5) for CTs up to 400 kV and less than ten (10) for CTs of 765 kV voltage class.

B.2.4.4 Capacitive Voltage Transformers (AIS)

Capacitive Voltage Transformers shall comply with IEC 61869 in general. These shall have three secondaries out of which two shall be used for protection and one for metering. The accuracy class for protection cores shall be 3P and for metering core shall be 0.2. The Capacitive Voltage Transformers on lines shall be suitable for Carrier Coupling. The Capacitance of CVT for 400 kV and 220 kV shall be of 4400/8800 pF depending on PLCC requirements whereas the Capacitance of CVT for 765 kV shall be 8800 pF. The rated burden of cores shall be closer to the maximum burden requirement of metering and protection system (not more than 50 VA for metering core) for better sensitivity and accuracy.

B.2.4.5 Surge Arresters (AIS)

624 kV, 336 kV Station High (SH) duty and 216 kV Station Medium (SM) duty gapless type Surge Arresters with thermal energy (W_{th}) of minimum 13 kJ/kV, 12 kJ/kV and 7 kJ/kV conforming to IEC 60099-4 in general shall be provided for 800 kV, 420 kV and 245 kV systems respectively. Other characteristics of Surge Arrester shall be chosen in accordance with system requirements. Surge Arresters shall be provided at line entrances, near transformers and reactors so as to achieve proper insulation coordination. Surge Arresters shall be provided with porcelain/ polymer housing fitted with pressure relief devices. A leakage current monitor with surge counter shall be provided with each surge arrester.

B.2.5 Protection Relaying and Control System

The protective relaying system proposed to be provided for transmission lines, auto-transformers, reactors and bus bars to minimize the damage to the equipment in the events of faults and abnormal conditions, is dealt in this section. All main protective relays shall be numerical type with IEC 61850 communication interface and should have interoperability during integration of numerical relays to communicate over IEC 61850 protocol with RTU/SAS/IEDs of different OEMs. All numerical relays shall have built in disturbance recording feature.

The protection circuits and relays of the transformer and reactor shall be electrically and physically segregated into two groups each being independent and capable of providing uninterrupted protection even in the event of one of the protection groups failing, to obtain redundancy, and to take protection systems out for maintenance while the equipment remains in service.

a) Transmission Lines Protection

765 kV, 400 kV and 220 kV lines shall have Main-I numerical three zone distance protection scheme with carrier aided inter-tripping feature. 765 kV, 400 kV and 220 kV lines shall also have Main-II numerical distance protection scheme like Main-I but from different make that of Main-I. The Main-I and Main-II protection relays of same make may be provided only if they are of different hardware and manufacturing platform or different principle of operation.

However, Line Current Differential Relay (with back up distance protection feature) as Main–I and Main-II shall be considered at both ends for short lines (line length below 30 km) having Fiber Optic Communication Link. Differential relay at remote end shall be provided by the TSP. The associated power and control cabling and integration with SAS at remote end shall be provided by respective bay owners.

In case of 220 kV line bays for RE Generators, Line Current differential relay (with back up distance protection feature) as Main-I and Main-II shall be provided. Further, in such cases, the matching line current differential relay for remote end shall be provided by the TSP as loose supply.

In case of loop in loop out of transmission lines, the existing protection scheme shall be studied and suitable up-gradation (if required) shall be carried out.

Further, all 765 kV, 400 kV and 220 kV lines shall be provided with single and three phase auto-reclosing facility to allow reclosing of circuit breakers in case of transient faults. These lines shall also be provided with distance to fault locators to identify the location of fault on transmission lines.

All 765 kV, 400 kV and 220 kV lines shall also be provided with two stage over voltage protection. The over voltage protection and distance to fault locator may be provided as in-built feature of Main-I and Main-II protection relays. Auto reclose as built-in function of Bay Control Unit (BCU) is also acceptable.

The Main-I and Main-II protection relays shall be fed from separate DC sources and shall be mounted in separate panels.

For 765 kV, 400 kV and 220 kV transmission lines, directional IDMT earth fault relay should be provided as standalone unit or in-built feature of Main-I and Main -II feature.

b) Auto Transformer Protection

These shall have the following protections:

i) Numerical Differential Protection

ii) Numerical Restricted Earth Fault Protection

iii) Numerical Back-up Over-Current and Earth Fault Protection on High Voltage (HV) and Intermediate Voltage (IV) side

iv) Numerical Over Fluxing Protection on HV and IV side

v) Numerical Overload Alarm

Further, Numerical Back-up Over-current and earth fault protection on HV and IV side of Autotransformer shall not be combined with other protective functions in the main relays and shall be independent relays. Besides these, power transformers shall also be provided with Buchholz relay, Magnetic Oil Gauge (MOG) with low oil level alarm, protection against high oil and winding temperature and pressure relief device etc.

Suitable monitoring, control (operation of associated circuit breaker and isolator) and protection for LT auxiliary transformer connected to tertiary winding of auto-transformer for the purpose of auxiliary supply shall be provided. The over current and other necessary protection shall be provided for the auxiliary transformer. These protection and control may be provided as built-in feature either in the bay controller to be provided for the auxiliary system or in the control and protection IEDs to be provided for autotransformer.

c) 765 kV Reactor Protection

Reactor shall be provided with the following protections:

i) Numerical Differential Protection.

ii) Numerical Restricted Earth Fault Protection

iii) Numerical Back-up Impedance Protection

Besides these, reactors shall also be provided with Buchholz relay, Magnetic Oil Gauge (MOG) with low oil level alarm, protection against oil and winding temperatures and pressure relief device, etc.

d) Bus Bar Protection

The high-speed low impedance type bus bar differential protection, which is essential to minimize the damage and maintain system stability at the time of bus bar faults, shall be provided for 765 kV, 400 kV and 220 kV buses. Duplicated bus bar protection is envisaged for 765 kV and 400 kV bus-bar protection. Bus bar protection scheme shall be such that it operates selectively for each bus and incorporate necessary features required for ensuring security. The scheme shall have complete bus bar protection for present as well as envisaged future bays i.e.

input / output modules for future bays for the bus section under present scope shall also be provided.

Bus Bar protection system for new substation shall be de-centralized (distributed) type.

In case, the bus section is provided, then each side of bus section shall have separate set of bus bar protection schemes.

Peripheral Units (PUs) shall be provided by the respective bay owners.

For existing substations, the existing bus bar protection shall be augmented as per requirement. Separate set of bus bar protection schemes including necessary modification with respect to feeder distribution shall be provided where new bus sectionaliser is being implemented.

e) Local Breaker Back up Protection

This shall be provided for each 765 kV, 400 kV and 220 kV circuit breakers and will be connected to de-energize the affected stuck breaker from both sides.

Notes:

1. *LBB and REF relays shall be provided separately from transformer differential relay.*
2. *LBB relay may also be provided as built-in protection function of distributed bus bar protection scheme; however in such case separate LBB relay shall be provided for tie bays (in case of One and Half breaker scheme).*
3. *Over fluxing and overload protection can be provided as built-in feature of differential relay.*
4. *In 765 kV and 400 kV switchyard, if spare bay of half diameter is identified as future, Tie CB relay panel shall be with Auto-reclosure feature.*

B.2.6 Substation Automation System

a) For all the new substations, state of art Substation Automation System (SAS) conforming to IEC-61850 shall be provided. The distributed architecture shall be used for Substation Automation System, where the controls shall be provided through Bay Control Units. The Bay Control Unit is to be provided bay wise for voltage level 220 kV and above. All Bay Control Units as well as protection units are normally connected through an Optical fibre high speed network. The control and monitoring of circuit breaker, dis-connector, re-setting of relays etc. can be done from Human Machine Interface (HMI) from the Control Room.

The functions of control, annunciation, disturbance recording, event logging and measurement of electrical parameters shall be integrated in the Substation Automation System.

At the new substations, the Substation Automation System (SAS) shall be suitable for the operation and monitoring of the complete substation including proposed future bays/elements.

In the existing substations with a Substation Automation System (SAS), augmentation of existing SAS shall be done for bays under the present scope.

In the existing Substations where Substation automation is not provided, control functions shall be done through control panels.

Necessary gateway and modems (as required) shall be provided to send data to RLDC/SLDC as per their requirement and shall be provisioned with 2+2 redundancy i.e. 2 channels for Main Control Centre and 2 channels for Backup Control Centre. In order to meet this requirement, suitable redundancy at port and card level need to be ensured by the TSP to avoid any single point of failure which may lead to interruption in real-time grid operation. Accordingly, all the hardware for communication services of station as stated above shall support dual redundancy for data transmission of station to respective main and backup RLDCs. Any augmentation work at RLDC/SLDC is excluded from TSP's scope. However, all the configuration work at substation end required to send data to RLDC/SLDC shall be in the scope of TSP.

b) Time Synchronization Equipment

Time Synchronization Equipment complete in all respect including antenna, cable and processing equipment required to receive time signal through GPS/NavIC or from National Physical Laboratory (NPL) through INSAT shall be provided at new substations. This equipment shall be used to synchronize SAS and IEDs etc.

B.3.0 Substation Support Facilities

Certain facilities required for the operation and maintenance of substations as described below shall be provided at the new substation. In existing substation, these facilities have already been provided and will be extended/ augmented as per requirement.

B.3.1 AC and DC power supplies

For catering the requirements of three phase and single phase AC supply and DC supply for various substation equipment (for present and future scope), the following arrangement is envisaged:

i) For LT Supply at each new Substation, two (2) Nos. of LT Transformers (minimum 800 kVA for substations with highest voltage rating as 765 kV) shall be provided which shall be fed from two independent sources as per the CEA (Technical Standards for Connectivity to the Grid) Regulations, 2007.

Metering arrangement with Special Energy Meters (SEMs) shall be provided by TSP at 33 kV tertiary of Transformer for drawing auxiliary supply at new substation. Such SEMs shall be provided by CTU at the cost of the TSP. Accounting of such energy drawn by the TSP shall be done by RLDC/RPC as part of Regional Energy Accounting.

Additionally, Active Energy Meters may be provided at the same point in the 33 kV tertiary of Transformer by local SEB/DISCOM for energy accounting.

ii) 2 sets of 220 V battery banks for control and protection and 2 sets of 48 V battery banks for PLCC/ communication equipment shall be provided at each new Substation. Each battery bank shall have a float-cum-boost charger.

At new substation, sizing of 220 V battery and battery charger shall be done based on the number of bays specified (including future bays) as per CEA Regulations and relevant IS. 2 sets of 48 V battery banks for PLCC and communication equipment for present and future scope shall

be provided at each new Substation with at least 10-hour battery backup and extended backup, if required.

iii) Suitable AC and DC distribution boards and associated LT Switchgear shall be provided at new substation.

For new substation, following switch boards shall be considered with duplicate supply with bus coupler/ sectionalizer and duplicate outgoing feeders except for Emergency lighting distribution board which shall have only one incoming feeder:

(a) 415 V Main Switchboard – 1 No.
(b) AC distribution board – 1 No.
(c) Main lighting distribution board – 1 No.
(d) Emergency lighting distribution board – 1 No.
(e) 220 Volt DC distribution board – 2 Nos.
(f) 48 Volt DC distribution board – 2 Nos.

Sizing of LT Switchgear shall be suitable to cater the requirement for all present and future bays. AC and DC distribution boards shall have modules for all the feeders (including future as specified).

iv) At new Substation, one No. of DG set (minimum 500 kVA for substations withhighest voltage rating as 765 kV) shall be provided for emergency applications.

v) At new substation, sizing of battery and battery chargers shall be done based on the number of bays specified (including future bays).

vi) For substation extensions, existing facilities shall be augmented as required.

B.3.2 Fire Fighting System

Fire-fighting system for substation including Transformer and Reactor shall conform to CEA (Measures Relating to Safety and Electric Supply) Regulations, 2023 as amended from time to time.

Further, adequate water hydrants and portable fire extinguishers shall be provided in the substations. The main header of the firefighting system shall be suitable for extension to bays covered under the future scope; necessary piping interface in this regard shall be provided.

At existing substations, the fire-fighting systems as available shall be extended to meet the additional requirements.

B.3.3 Oil evacuating, Filtering, Testing and Filling apparatus

To monitor the quality of oil for satisfactory performance of Transformers, Shunt Reactors and for periodical maintenance necessary oil evacuating, filtering, testing and filling apparatus would be provided at new substations. Oil storage tanks of adequate capacities for storage of transformer oil would be provided.

Online Transformer Oil Drying Out System shall be provided in line with the provisions of Standard Specification and Technical Parameters for Transformers and Reactors (66 kV and above Voltage Class) as amended up to date available on CEA website.

B.3.4 Illumination

Normal and emergency AC and DC illumination shall be provided adequately in the control room and other buildings of the substation. The switchyard shall also be provided with adequate illumination.

The lighting of the entire control room building, fire-fighting pump house, other building (if any) and switchyard shall be done by LED based low power consumption luminaries.

B.3.5 Control Room

For the new substation, substation control room shall be provided to house substation work stations for station level control (SAS) along with its peripheral and recording equipment, AC and DC distribution boards, DC batteries and associated battery chargers, Fire Protection panels, Telecommunication panels and other panels as per requirements. Air conditioning shall be provided in the building as functional requirements. Main cable trenches from the control room shall have adequate space provision for laying of cables from the control room for all the future bays.

At existing substations, the adequacy of size of control room shall be ascertained and the same shall be augmented as per requirement.

B.3.6 Control Concept

All the EHV circuit breakers in substation/switching stations shall be controlled and synchronized from the switchyard control room/remote control center. All the isolators shall have control from remote/local whereas the earth switches shall have local control only.

B.3.7 Visual Monitoring System (VMS) for watch and ward of substation premises:

Visual Monitoring System for effective watch and ward of substation premises shall cover all the transformers and reactors, all other major AIS Equipment (such as CB, isolators, CT, CVT, SA etc. as applicable), panel room, all the gates of switchyard and all entry and exit points of control room building and accordingly the location of cameras shall be decided. In addition to the gates of the switchyard, the cameras shall also be located around the boundaries at suitable locations. The camera shall be high-definition color CCD camera with night vision feature. The VMS data partly/completely shall be recorded (minimum for 15 days) at least @25fps (or better) and stored on network video recorder. The system shall use video signals from various cameras installed at different locations, process them for viewing on workstations/monitors in the control room and simultaneously record all the cameras. The VMS data should go only to the intended personnel/facility and not to the remote server of the Camera (VMS supplier).

Mouse/keyboard controllers shall be used for pan, tilt, zoom and other functions of the desired camera. The Visual Monitoring System shall have provision of WAN connectivity for remote monitoring.

All camera recordings shall have Camera ID and location/area of recording as well as date/time stamp. The equipment should generally conform to Electromagnetic compatibility requirement for outdoor equipment in EHV substation.

Advisory on deployment of CCTV issued by Ministry of Electronics and Information Technology (MEITY) shall be followed.

At existing substations, the Visual Monitoring System if available shall be augmented as per existing or better specification as required.

B.4 General Facilities

a) Line Gantry/Towers are envisaged for bays under the present scope only. However, for adjacent future line bay, gantry/tower shall be designed for extension (considering Hexa conductors for 765 kV and Quad conductors for 400 kV and Twin conductor for 220 kV future lines) wherever applicable.

b) Bay extension works at existing substation shall be executed by TSP in accordance with the requirements/provisions mentioned above. However, interface points shall be considered keeping in view the existing design/arrangement at the substation.

c) TSP has to arrange for construction power and water on its own.

d) All outdoor steel structures including anchor/foundation bolts shall be fully galvanized. The weight of the zinc coating shall be at least 610 g/m^2, however, for coastal/creek regions it shall be at least 900 g/m^2. (if applicable)

e) In 765 kV and 400 kV switchyard, if spare bay of half diameter is identified as future, all the equipment for Tie and Future Bay shall be designed considering the current rating of line bay i.e. 3150 A.

f) Boundary wall shall be brick masonry wall with RCC frame or Stone masonry wall or Precast RCC wall under present scope along the property line of complete substation area including future switchyard area to prevent encroachment and unauthorized access. Minimum height of the boundary wall shall be of 1.8 m from Finished Ground Level (FGL).

g) All electrical equipment shall be installed above the Highest Flood Level (HFL) and where such equipment is not possible to be installed above Highest Flood Level, it shall be ensured that there is no seepage or leakage or logging of water.

h) As per CEA (Technical Standards for Construction of Electrical Plants and Electric Lines) Regulations 2022 and CEA Manual on Transmissions Planning criteria 2023, line approaching substation shall normally be perpendicular to the substation boundary for a stretch of 2-3 km. Accordingly, TSP shall ensure that line terminations at substations are arranged in a manner to avoid hindrance to future line terminations at the substations.

i) TSP shall finalize the substation site/layout such that the corridor for the termination of lines, including future lines at the substation, can be accommodated without any constraints. Accordingly, forests, large water bodies, or hills adjacent to the substation

boundary should be avoided.

B.5 EXTENSION OF EXISTING SUBSTATION

The following drawings/details of existing substation are attached with the RfP documents for further engineering by the bidder.

S. No.	Drawing Title	Drawing No./Details	Rev. No.
A.	**765 kV Doma S/s**		
1.0	Single Line Diagram	*New substation which is presently under bidding.*	
2.0	General Arrangement		
3.0	Earthmat Layout		
4.0	Visual Monitoring System		
5.0	Bus Bar Protection		
6.0	Substation Automation System (SAS)		
B.	**765 kV Raichur New**		
1.0	Single Line Diagram	*C.ENGG/TBCB/KOPPAL-II PART-B/RAICHUR/SLD/01*	0
2.0	General Arrangement		
3.0	Earthmat Layout		
4.0	Visual Monitoring System		
5.0	Bus Bar Protection		
6.0	Substation Automation System (SAS)		
C.	**400 kV Nagarjunasaagr S/s**		
1.0	Single Line Diagram	*NAGARJUNASAGAR/SLD*	
2.0	General Arrangement		
3.0	Earthmat Layout		
4.0	Visual Monitoring System		
5.0	Bus Bar Protection		
6.0	Substation Automation System (SAS)		

B.5.1 The existing drawings provided above and in subsequent amendments to the RfP are as received from the developer of existing substation and provided only for reference. Bidders shall follow the RfP for scope of work. Actual site conditions may be different due to other schemes being executed or subsequent revisions by the developer. Thus, Bidders are advised to visit the substation sites and acquaint themselves for details such as:

i. Actual site conditions, Layout, Topography
ii. Infrastructure such as roads, cable trench, drainage
iii. Space availability in existing control room and LT panel room
iv. Soil Investigation

v. Fire Hydrant Layout
vi. SAS architecture and IO list
vii. Boundary
viii. Design philosophy etc.

SPECIFIC TECHNICAL REQUIREMENTS FOR STATCOM

The proposed STATCOMs shall be conforming to the requirements of CEA (Technical Standards for Connectivity to Grid) Regulations, 2007 including amendments and CEA (Technical Standards for Construction of Electrical Plants and Electric Lines) Regulations 2022, as amended from time to time. Other CEA Regulations and MoP guidelines, as applicable, shall also be followed and complied with.

C.1 Introduction:

This technical specification for a STATCOM Station consists of STATCOM (to be installed at MV bus) including associated coupling Transformer (rated 400/xx kV) and other equipment connected to the 400 kV bus. MV voltage level (xx kV) of the coupling Transformer can be chosen by the TSP to optimize the offered solution which meets functional requirement of this Technical Specification.

The STATCOM station shall operate asymmetrically in the leading and lagging MVAr regions as applicable to reach the dynamic range specified. The purpose of the STATCOM station is to regulate the voltage of 400 kV Bus Point of Common Coupling (PCC). The Configuration and the nominal rating of the STATCOM station is specified in this document.

The main building block of the STATCOM should be single phase Voltage Source Converter (VSC) based convertor valve (multi-level) operating in a way to eliminate or minimize AC filter requirement to High pass filter only and connected to the xx kV bus through air core reactors.

C.1.1 Definitions and Abbreviations

For the purpose of this specification, the following definitions / abbreviations are used:

PCC: Point of Common Coupling (herein also called as Point of Interconnection (POI). The connection point between the STATCOM and the ISTS at which performance requirements are defined.

Reference Voltage (Vref): The Point on the voltage/current (V/I) characteristics where the static synchronous compensator (STATCOM) is at zero output (i.e. where no reactive power is absorbed from, or supplied to, the transmission system where the voltage is controlled)

MV: Medium Voltage.

STATCOM Unit: Static Synchronous Compensator based on Multi-Module technology and including air cored reactors as needed, Valve cooling, switchgear and its control and protection.

STATCOM: Static Synchronous Compensator consisting of STATCOM Unit(s) connected to a common Coupling Transformer. A static synchronous generator operated as a shunt connected compensator, whose capacitive or inductive output current can be controlled independently of the AC system voltage.

Sub Module: Basic single power module of a Multi Module STATCOM unit Valve. It is a Part of a STATCOM unit valve comprising controllable switches and diodes connected in full bridge

arrangement, together with their immediate auxiliaries, and storage capacitor, if any, where each controllable switch consists of one or more switched valve device(s) connected in series.

Valve: Electrically and mechanically combined assembly comprising of forced commutated devices [for example insulated-gate bipolar transistor(IGBT)] assembled in levels, complete with all connections, auxiliary components, and mechanical structures, which can be connected in series with each phase of the reactor of a STATCOM unit.

Valve Section: Electrical assembly defined for test purposes, comprising one of several sub-modules.

Valve Structure: Physical structure holding valve(s), which is insulated to the full system voltage above earth potential.

STATCOM Station: STATCOM Station includes 400 kV Switchgear, Coupling Transformer, STATCOM along with its switchgear and complete integrated control and protection whose outputs are coordinated. (Complete turnkey delivery at site).

CT: Current Transformer.

VT: Voltage Transformer.

SAS: Substation Automation System.

Response Time: the duration from a step change in control signal until the voltage changes by 90% of its final change, before any overshoot.

Settling Time: The duration from a step change in control signal input until the STATCOM output settles to within ±5% of the required control output.

Slope: The ratio of the voltage change to the current change over a defined controlled range of the STATCOM, normally the full (inductive plus capacitive) range at nominal voltage, expressed as a percentage.

VSC: Voltage Source Convertor, A forced commutated device (for example, IGBT) based self-commutated convertor that is capable of generating AC voltage from DC capacitor.

Voltage/Current (V/I) Characteristic: The relationship between the current of the STATCOM and the voltage at the point of connection.

Lagging Operation: Inductive operation or reactive power absorption of the STATCOM similar to a shunt reactor.

Leading Operation: Capacitive operation or reactive power generation of the STATCOM similar to a shunt Capacitor.

TSP: Transmission Service Provider

C.2 Relevant Standard:

STATCOM Station shall comply with the following standards (latest edition):

S. No.	Description	Standards
1	Voltage source converter (VSC) valves for STATCOM	IEC- 62927 IEEE- 1052 IEC-60747
2	Control, protection and monitoring	IEC-61000 IEC-60255
3	Valve Hall for housing the equipment as above comprising of: - wall bushings for connection between converter phases and decoupling reactors, - piping and tubing connections of the cooling system to converter - connection of the control cabinet with the converter through optical fibers - internal lighting, auxiliary power supply (AC and DC) and power socket system - internal HVAC system	IEC-60071 IEC-60270 IEC-60137
4	X kV, dry insulated, air core and air self-cooled decoupling reactors., half-reactors stacked on above the other, Outdoor installation, Complete with supporting structures	IEC- 60076
5	Power Capacitors	IEC-60871-1
6	400 kV Power transformer (Coupling Transformer)	IEC-60076 IEC-60354
7	CT's and VT's	IEC- 61869
8	Dis-connectors and Earthing Switches	IEC- 62271
9	HV and MV Circuit Breakers	IEC- 62271
10	Surge Arresters	IEC- 60099
11	Auxiliary and grounding transformer	IEC- 60076 IEEE C57.32 IS- 5553 (Part 6)
12	Neutral Grounding Resistor, charging resistor	IEEE- C57.32
13	UPS, SMPS and Other Power supply units	IEC- 62040 IEC- 61558
14	Cyber Security	IEC-62243

C.3 Scope of work for STATCOM

The scope of work with regard to the works associated with the STATCOM shall comprise ±300 MVAr Modular Multi-level Voltage Source Converter (MMC-VSC) based STATCOM

STATCOM can either be Single/ multiple units. The minimum size of a unit allowed is 150 – 200 MVAr. TSP shall ensure that there are no coordination issues between multiple STATCOM branches of STATCOM station. MV bus voltage rating is to be decided by OEMs.

The TSP shall be responsible for the complete installation of STATCOM station along with the substation works as specified in the complete scope of work.

The TSP shall also perform the system studies (steady state and dynamic) according to the requirement mentioned and documentation of the same shall be preserved by TSP and to be submitted to CEA/CTU/GRID-INDIA, as per their request.

TSP shall carry out a detailed study on prevailing system conditions before interconnection of the STATCOM to assess the performance of the STATCOM. Parameters tuning to avoid any adverse impact on the grid with integration of the STATCOM shall also be identified and implemented at this stage. TSP shall carry out tuning of Power Oscillation Damping (POD) along with an interaction study with nearby HVDC/FACTS controllers.

TSP shall ensure interconnection study at the time of commissioning and shall also be responsible for tuning the POD during the license period as per relevant standards (e.g. IEEE 1052).

The switchgear for connection of STATCOM units, provided on the secondary side of the coupling transformer shall be of standard voltage rating as per relevant IEC. The switchgear, structure, control, protection and substation automation on the 400 kV side shall be as per applicable Technical Specification of the substation equipment.

Generally, the purpose of STATCOM is to improve system stability, provide damping, and smooth out the step voltage change and external compensating equipment (i.e. any existing capacitor and reactor banks) switching and provide steady state VARs as needed to support the 400 kV bus voltage.

In order to get optimum control of MVAr, as well as reactor banks connected on the 400 kV HV side, may be integrated along with STATCOM control to provide steady state 400 kV bus voltage control in a smooth manner.

The operating functions of the STATCOM Station shall include:

- Steady state voltage control of 400 kV bus,
- Balance steady state voltage at 400 kV bus,
- Dynamic over-voltage control,
- Transient and Dynamic stability control
- Damping of Power Oscillations

It is assumed that the arresters will limit any transient and switching surge over voltages and may also, by design, limit dynamic over voltages.

The requirement of reactive power compensation guaranteed by the TSP shall not be less than the levels specified considering following.

- The total cumulative Capacitive (+) and Inductive (-) MVAr rated Capacity of STATCOM Station as defined above comprising of STATCOM, coupling transformer, coupling reactor or any filter (if applicable) shall be rated at 1 p.u. voltage, for the frequency range of 48.5 Hz-50.5 Hz and 50 ^{o} C (Celsius) ambient temperature at 400 kV Bus (Referred to as “Point of Common Coupling” or PCC).

- The rated capability of STATCOM, shall be at 400 kV (Referred to as "Point of Common Coupling" or PCC) and in the steady state frequency range of 48.5 Hz-50.5 Hz.

- The STATCOM Station including STATCOM Units, shall be designed to operate continuously under the worst possible combination of steady state voltage range of 360-440 kV and frequency range of 47.5 Hz – 52.5 Hz respectively and transient and temporary over voltages defined in Clause C.6.1-f).

- The AC voltage unbalance at fundamental frequency shall be assumed equivalent to a negative phase sequence component of 1.5% for equipment rating purposes.

- The reactive power compensation levels shall be determined by manufacturing tolerances of the components and measurements carried out using metering accuracy instrumentation at the 400 kV feed points to the STATCOM Station.

- The reactive power capability shall also be determined by calculations based on test values of appropriate quantities at the discretion of the owner.

- In calculations of capability and availability, the owner shall assume the most unfavorable combinations of control, manufacturing and measurement tolerances.

- In case more than one STATCOM Station are installed in a particular substation, each STATCOM Station shall be connected to 400 kV bus individually with complete separate downstream system. Each individual STATCOM station shall have complete independent yet coordinated control system to avoid simultaneous tripping of both STATCOM Stations. The system shall be designed in such a way that single common contingency (other than loss of 400 kV voltage, abnormal system events) will not cause tripping of both STATCOM Stations.

- Operation of STATCOM Station shall not excite any resonance condition in connected Power System.

- Control of STATCOM Station shall be designed to prevent hunting.

C.3.1 STATCOM building

The STATCOM station shall have an independent building including a separate control room different from the main control room building of the 765/400 kV Substation.

The STATCOM Building shall comprise of following facilities:

1. Control and Relay Panel room
2. ACDB and DCDB room
3. Battery room
4. Service Room cum workshop
5. Conference room
6. Valve hall
7. Cooling system room
8. Lobby

9. Corridor with minimum width of 1600 mm
10. Portico
11. Common Toilet
12. Provision of shaft for electrical, sanitary, water supply facilities
13. Other facilities as per functional requirement of building
14. AHU Room

C.4 Ambient Condition

STATCOM Station should be designed to perform at 50 ^{O}C ambient temperature.

C.5 Power System Characteristic

The following AC power system characteristics apply at the point of connection i.e. point of common coupling in this case (PCC). STATCOM station operation is required within the parameter value and duration given in following table:

S. No.	Power System Characteristic	Value	unit
1.	Nominal ac system voltage, line-to-line	400	kV
2.	Maximum continuous ac system voltage, line-to line	420	kV
3.	Minimum continuous ac system voltage, line-to line	380	kV
4.	Maximum short-term ac system voltage, line-to line	448	kV
5.	Maximum duration of item 4	10	s
6.	Continuous negative-sequence voltag component (used for performance calculation)	1	%
7.	Continuous negative-sequence voltag component (used for rating calculation)	1.5	%
8.	Continuous zero-sequence voltage component	1	%
9.	Nominal ac system frequency	50	Hz
10.	Maximum continuous ac system frequency (fo rated output)	50.5	Hz
11.	Minimum continuous ac system frequency (fo rated output)	48.5	Hz
12.	Maximum short-term ac system frequency	52.5	Hz
13.	Minimum short-term ac system frequency	47.5	Hz
14.	Basic Insulation Level (BIL)	1550	kV peak
15.	Switching impulse level (SIL)	1050	kV peak
16.	Power Frequency Withstand voltage	630	kV
17.	Maximum three-phase fault current a) for performance requirements b) for rating of STATCOM X/R (Positive/Negative Seq)* X/R (Zero Seq)* Clearing time - normal Clearing time – backup	 a) 63 b) 63 22.5 33 0.1 0.75	 kA kA for 1s s s

S. No.	Power System Characteristic	Value	unit
18.	Maximum three-phase fault current	63	kA
19.	Minimum three-phase fault current # -for performance requirements -for safe operation	 24 24	 kA kA
20.	Maximum single-phase fault current	63	kA
21.	Minimum single-phase fault current#	11	kA
22.	Harmonic impedance sectors for each harmonic number up to the 49th harmonic or system impedance data as R-X values with frequency steps not larger than 1 Hz (for performance and/or STATCOM system component rating)	Chapter 7.3 of CIGRE Publication 139	
23.	Background harmonic voltage (or current) spectrum (for STATCOM components rating) (Distortion up to 15th Harmonic	5th Harmonic 1.5% 7th Harmonic 1.0% Other Harmonics 0.5% (each)	
24.	Power System Phase Rotation	CCW	

The STATCOMs shall remain connected to the grid and shall be able to operate at rated reactive power capability when voltage at the interconnection point, on single phase or three phases dips up to the level depicted by the thick lines in the following curve (for specified time) and up to at least 0.3 p.u. in case of two phase faults :

VT : Actual Voltage; Vn: Nominal Voltage

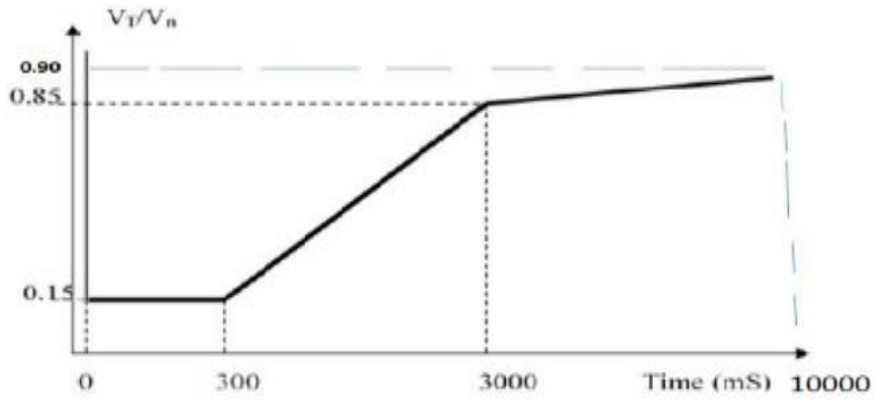

C.6 STATCOM Station Characteristics

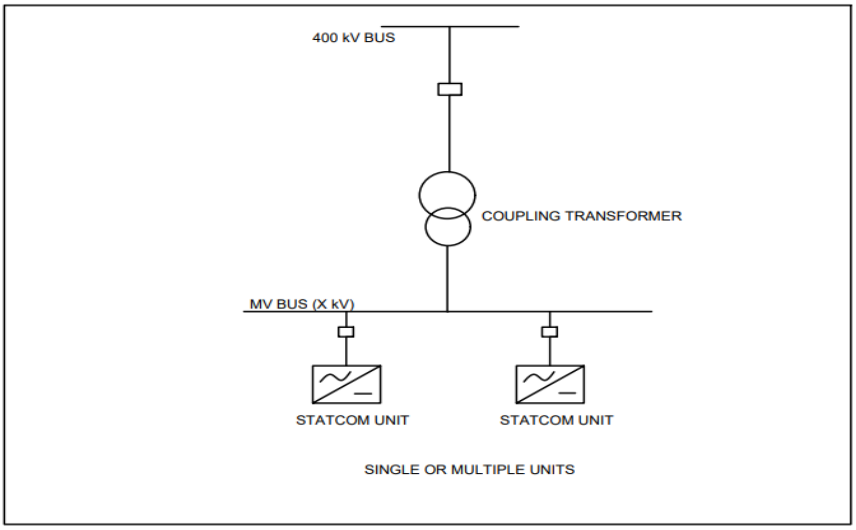

Figure-1: Conceptual Indicative Schematic diagram of STATCOM Station

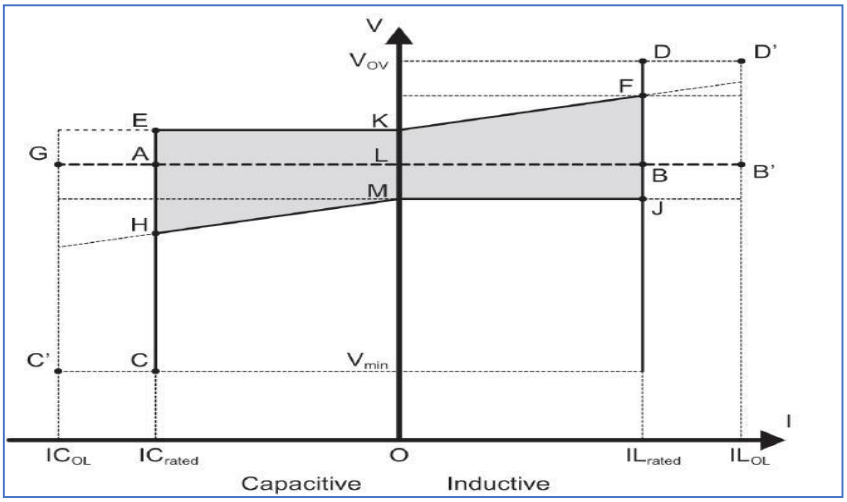

Figure-2: VI Curve of the VSC Portion

C.6.1 STATCOM Station Ratings

The output of a STATCOM Station shall be adjusted continuously over the range illustrated in Figure-2.

The following items define the ratings of the STATCOM station equipment.

a) The STATCOM Station should regulate the voltage of 400 kV bus to a reference voltage of 400 kV (1.0 per unit, Point L Figure-2), continuously adjustable between 0.95 per unit and 1.05 per unit.

b) The nominal capacitive and inductive reactive power output of the STATCOM should be as defined in the scope, at 1.0 p.u. AC bus voltage and nominal system frequency (f), and 50°C ambient temperature (Point A and point B of figure-2).

c) The slope of the STATCOM Station characteristic should be adjustable in steps of not greater than 0.5% between 1% and 8%, on a basis of cumulative MVA capacity of STATCOM Station (A+B in Figure-2).

d) The STATCOM Stations shall continue to inject reactive power during temporary under voltage down to 60 kV (0.15 p.u.) for the duration 0.3 sec (Point C) and STATCOM behavior for voltages above 0.15 p.u. shall be as specified under section C.5 above. The STATCOM system may be blocked if the under voltage persists for time beyond limits specified under section C.5 above.

e) The STATCOM shall continue to absorb reactive power during HVRT Conditions in a controlled manner as per the following.

Nominal Voltage (pu)	Minimum time for remaining connected to the Grid
V > 1.50	Instantaneous trip
1.50 ≥ V > 1.30	100 milli seconds
1.30 ≥ V > 1.10	10 seconds
V ≤ 1.10	Continuous

STATCOM Station may be tripped if the respective temporary over voltages as mentioned above persists for more than its respective mentioned duration.

f) The STATCOM Station should be capable of repeating temporary operation as defined in any one of item (d) and (e) as above for at least 3 charging cycles in 60 mins.

g) The coupling transformer and all bus equipment, such as filter branches (if applicable), etc. and the MV Bus should be rated to withstand the specified continuous and short-term operation, and to withstand or be protected against voltage and current stresses that exceed these conditions.

h) All equipment in the STATCOM Station should be capable of sustaining, without damage, any fault limited by the maximum design short circuit level of the system and the Coupling transformer impedance.

i) The TSP shall assume the negative sequence voltage of 1% at rated short circuit level and provide control to reduce this unbalance.

j) The injected harmonics by STATCOM Station under the full operating range measured at 400 kV Bus (PCC) in accordance with IEEE Standard.

k) The STATCOM controls should be designed to correct negative sequence voltage during steady state operation.

l) The switching module design should include an appropriate allowance for stray capacitance and component tolerances.

m) The STATCOM should be designed to prevent, or alternatively to withstand, false firing events, i.e., the firing of any valve at an incorrect time in the cycle or when not ordered.

C.6.2 Control Objectives

The control system shall control the STATCOM required under this specification, as well as all bus reactors on the 400 kV HV bus of the substation.

Operation logic for the breakers, disconnectors and earth-switches in the STATCOM Station shall also be incorporated in the control system. The control shall be programmable and shall have sufficient scope and flexibility (software programming margin of at least 20%) to permit re-programming according to future changes/addition in the power system. The operator interface must be integrated in a latest version of Windows environment.

C.6.2.1 STATCOM Station Functions and Applications

C.6.2.1.1 Voltage Control mode (Automatic and Manual)

Control of the positive sequence component of the fundamental frequency voltage in steady state at POI shall be, with slope in the range as specified at clause 6.1 c) above.

There shall be following provisions in STATCOM System to operate in Voltage Control Mode:

a) To adjust the reference voltage for changes by Grid Operator.

b) To adjust the value of reactive power droop in p.u. to provide a stable, coordinated and dynamic response.

c) To adjust the voltage dead band with a minimum magnitude of ±0.05 p.u.

C.6.2.1.2 Fixed Reactive Power Mode

In this mode, the STATCOM system shall maintain a specified constant reactive power output at the POI under continuous / steady state operating region. The target reactive power level and mode (injection or absorption) shall be specified by the Grid operator. There shall be a provision to adjust the reactive power set point. The dynamic response of the STATCOM system to any changes in reactive power shall be positively damped with a damping ratio of 0.3 or better.

C.6.2.1.3 Steady State Condition

The STATCOM Station shall provide necessary reactive power support to the 400 kV bus (PCC) to compensate for voltage variation under steady state.

C.6.2.1.4 Dynamic Over-voltage Control Performance

The STATCOM shall be required to provide necessary reactive power support with fast and smooth variation so that over-voltages under dynamic conditions are controlled.

The operation of each STATCOM over its range of MVAr from full capacitive to full Inductive capacity and vice-versa shall be on the basis of smooth variation.

C.6.2.1.5 Transient and Dynamic Stability Performances

The STATCOM Station shall provide necessary reactive power so that the transient and dynamic stability of the Owner's system is enhanced.

C.6.2.1.6 Damping of Power Oscillations

The STATCOM shall provide necessary damping to power oscillations by modulating its output in its entire range based on the measured rate of change of power/frequency at the 400 kV bus. The damping controller would track local area oscillations as well as wide area oscillations and control would include several loops each focused on different frequencies.
TSP shall ensure the damping of oscillation during the entire license period including the pre–commissioning period as per relevant standards. (e.g. IEEE 1052).

C.6.2.1.7 Facility for compensation of phase imbalance

Provide negative phase sequence voltage control to minimize the presence of negative sequence content of the 400 kV bus voltage.

C.6.2.1.8 Start up and Initial Switching

The operation of STATCOM Station during start-up/initial switching on should not create significant energizing transients causing voltage drop, voltage distortion and swinging of transmission voltage angle at the PCC bus by more than +/-5%. TSP shall have to ensure this analytically during the design phase and also in the field after the commissioning of the facility. TSP shall prepare the design documentation and the same shall be preserved by TSP and to be submitted to CEA/CTU/GRID-INDIA, as per their requirement.

C.6.2.1.9 Gain Supervision and Control

To control the regulator gain in order to prevent oscillations and excessive overshoot in the STATCOM response, a gain supervision function shall be implemented. This shall be an essential function for the supervision of stability of closed-loop voltage control. The function of this controller is that when the supervision of the gain in the voltage regulator detects oscillations in the voltage controller output, the gain shall gradually be reduced until stability is reached. Normally it is a changed condition in the transmission system contribution to the closed loop gain that results in instability. The reduction in the voltage regulator gain shall only balance the external change. The control should be adaptive in order to maximize its effectiveness. Gain reductions should be indicated and the reduction of the gain shall be able to be reset to nominal value by means of commands from the operator interface or automatically. A relative gain factor shall also be able to be changed from a gain optimizer.

C.6.2.1.10 Coordinated reactive power control of external devices

To optimize the use of dynamic VARs versus steady state VARs, control of externally connected shunt capacitor or reactor banks shall be implemented. Such banks will be connected locally to a HV bus or/and at MV bus. For simultaneous control with the supplementary VSC current controller, coordination for the two functions shall be provided.

C.6.2.1.11 Supplementary VSC current controller

To optimize the use of dynamic VARs versus steady state VARs, a control function that slowly reduces or offsets the STATCOM point of operation shall be implemented. By deliberately adjusting the voltage reference setting within a narrow window the STATCOM system output

is pushed towards either a specific point or towards a window to preserve dynamic range. This slow operating function is meant to provide for slower controllers, such as externally connected shunt banks to operate and meet the slower long term voltage variations caused by daily or weekly load variations. Rapid changes in the system voltage that call for dynamic compensation will have priority over this type of controller.

C.6.2.1.12 Gain optimization

To provide operation at optimal regulator gain, a fully automatic optimizing function shall be implemented. This function operates by inducing a small change in the STATCOM output. The gain is adjusted based on the network response signal.

C.6.2.1.13 Control of Direct Current

During STATCOM operations, any flow of direct current to the transformer's MV side must be less than 25% of the transformer magnetizing current. DC current flow in the transformer should be minimized by an independent control function that minimizes DC current. For presence of up to 0.2% second harmonic in 400 kV system, the STATCOM control should minimize DC current flow in the transformer.

C.6.2.2 Under Voltage Strategy

It is essential that the STATCOM Station operates in a robust manner when transmission system under voltages appears. In case of single phase or three phase faults, the STATCOM units must operate unrestricted, producing its rated capacitive current for transmission system voltages down to 0.15 p.u. In case of two phase fault, the STATCOM shall be capable to produce rated capacitive current atleast down to 0.3 p.u., however, it shall be designed to operate upto 0.15 p.u. The STATCOM must be designed to operate at transmission system under voltage, even considering that severe voltage unbalances can appear. The STATCOM must not be restricted by short term negative sequence voltages up to 1.5%, appearing in conjunction with under voltages.

Transmission system under voltages below 0.15 p.u. will appear in conjunction with transmission system faults. The STATCOM must ride through during faults and post fault under voltages. The minimum trip delay for the STATCOM Station, upon complete loss of the transmission system voltage shall not be less than 5 seconds. If station AC auxiliary power distribution is affected, critical loads must be fed from DC station batteries, Uninterrupted Power Supply (UPS) without tripping the STATCOM Station. Adequate capacity must be kept in DC station batteries, UPS to feed critical loads for the smooth operation of the STATCOM Station facility. There must be redundant station battery system with each station battery system capable of delivering 100% load.

At under voltage conditions for the transmission system voltage, special control strategies are activated which override the normal control modes presented above. Normally if the voltage is low, the output from the STATCOM will be capacitive. If the voltage in all three phases goes below a level, but not greater than 0.15 p.u., a special under voltage strategy may be activated

that controls the STATCOM output to 0 MVAr. As soon as the voltage goes higher than 0.15 p.u., the under voltage strategy is deactivated and the normal control will be in operation (for the specified duration).

The STATCOM Station must not be tripped or shut down automatically due to under voltages appearing for specified duration as specified under section C.5 above. STATCOM Station must continue to operate when AC system Voltage on any or all phases dips down to 0.15 p.u. voltage as per the characteristic given at section C.5.

C.6.2.3 Over Voltage Strategy

C.6.2.3.1 The TSP shall carry out dynamic stability study upfront in order to assess the dynamic overvoltage requirements. These studies shall include conditions with maximum and minimum short circuit system MVA conditions, single phase and three phase faults as well as stuck breaker, outage of the nearby generator and also with the outage of parts of the STATCOM Station. It is important that the STATCOM Station rides through temporary over voltages and not trip when it is needed the most.

C.6.2.3.2 The system should be able to withstand any 3 phase, 5 cycle (100 ms) and single phase 10 cycles (200 ms) fault with consequent loss of a 400 kV double circuit line and loss of a 500 MW generator. The fault duration mentioned above corresponds to time assumed for the persistence of fault. For other system parameters refer clause 5 above (Power System Characteristics). In addition to above requirement, system contingency cases as provided in Annexure-I need to be considered and satisfied.

C.6.2.3.3 The 400 kV system and equipment to which the STATCOM Station is connected is designed to withstand switching surge overvoltage up to 2.5 p.u. and power frequency over voltages up to 1.5 pu with initial value of the temporary overvoltage up to 2.0 p.u. for 1-2 cycles. Based on arrestor coordination and under the worst case scenario the 400 kV system phase to ground peak over voltages may be expected as follows

i) 650 kVp for 3 peaks
ii) 575 kVp up to 5 cycles
iii) 530 kVp up to 1 second
iv) 475 kVp up to 10 seconds

a) The STATCOM Station shall be designed to withstand these sequential over voltages.

b) If the over voltages greater than 1.1 p.u. are exceeded in magnitude and duration due to any system contingencies, suitable control action shall be taken by STATCOM Station to bear this kind of contingency.

c) The TSP shall evolve the insulation co-ordination of the components of the STATCOM Station after studies have been conducted to determine the over- voltage profile with the STATCOM connected to the system.

d) The TSP shall ensure that STATCOM Station will not excite ferro-resonance and sub-synchronous oscillation in the AC system. The study report in this regard shall be preserved and to be submitted to CEA/CTU/GRID-INDIA, if required.

e) It may also be noted that the tripping action for 400 kV lines is initiated if the overvoltage exceeds 1.1 p.u. for 10 seconds. The tripping of 400 kV lines is initiated if 1.5 p.u. voltage persists for more than 100 milli seconds. The over voltage strategy shall be coordinated with these settings such that the STATCOM Station rides through up to these levels.

C.6.2.4 STATCOM Station Over load / Over Current

The overvoltage cycles mentioned in clause 6.2.3.3 above create a corresponding current overload in the STATCOM Station components; the STATCOM Station and its components shall be designed to withstand these.

In addition to the above the STATCOM Station and its components shall be designed to withstand overloading caused due to the following eventualities.

i) Short circuits and ground faults in the 400 kV system especially those occurring near the STATCOM Station and medium voltage bus of the STATCOM Station.

ii) Transient overvoltage due to switching operations and atmospheric effects.

iii) Temporary over voltages.

iv) Short circuits in the transformer secondary circuit such as:
- Bushing terminal fault
- Flashover across a reactor, Bus Bar and other connected components/switchgear etc.

v) Protection system faults.

If the rated overvoltage is exceeded as a result of prolonged stressing or for other reasons, the protection specified elsewhere in the specification shall come into effect to prevent damage.

C.6.2.5 Dynamic Performance Controls of STATCOM Station

The TSP must describe in detail, the dynamic reactive power controls for enhancing stability margin and also damp oscillations of any critical frequencies. The dead band for continuous damping control must be very small so that there are no discernible sustained oscillations.

C.6.2.6 Protective Control Functions

TSP shall provide all necessary protections including Main and Back-up protections for all protective zones and equipment like transformers, STATCOM Units, MV Bus Bar etc. TSP shall provide any protective control functions to meet the performance requirement of STATCOM under the scope of the TSP.

a) Overvoltage Protection

TSP shall provide adequate overvoltage protection as a result of any normal operation, mal-operation or system event.

b) Over current Protection

TSP shall provide adequate over-current protection for the STATCOM Station as a result of any abnormal operation, mal-operation or system event.

c) Gate level control Supervision

TSP shall provide adequate Sub module Gate level control supervision.

C.6.2.7 STATCOM Station Response

STATCOM station response shall be such that the change in measured system voltage to small disturbance should reach 90% of the desired total change within 30 ms of initiating a 5% step change of voltage reference. The maximum overshoot should not exceed 120% of the total change and the settling time should not exceed 100 ms, after which the voltage should be within ±5% of the final value. This response characteristic within these limits must be respected when the system's three-phase fault MVA is between the minimum and maximum value defined in clause-5. The response of the system voltage using the actual controller should be validated on a real time simulator during the Factory Acceptance Test (FAT) at the manufacturer's premises. For the purpose of STATCOM Station, response time measurement and signal conversion of the voltage, the error should not exceed 0.3%. The voltage response acquisition circuit should have a response time of no longer than 10 ms. However, time longer than 10 ms can be allowed provided the requirement of STATCOM response time is met.

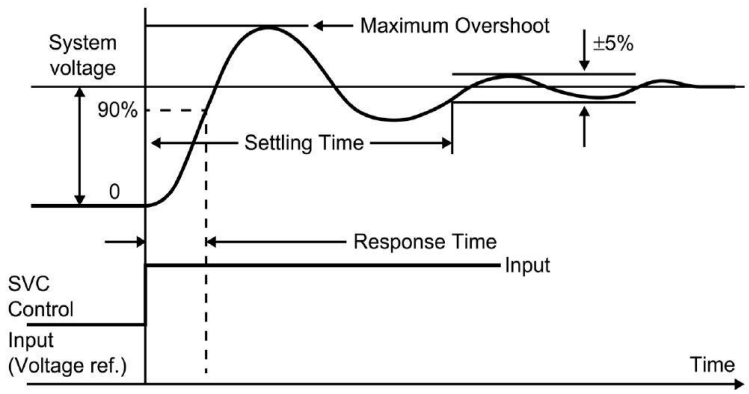

Figure-4 Response and Settling time

C.6.3 Harmonic performance and AC harmonic filter design

It is likely that with multi-level VSC based technology, no filters or only a small high-pass filter will be needed. The STATCOM shall be operable without AC filters. The STATCOM Station should be designed to eliminate the effects of any harmonic resonance between its, filter branches, and the AC system. To limit the harmonic distortion imposed on the 400 kV transmission system, the additional contribution of harmonic distortion from the STATCOM Station to 400 kV system (PCC) should not exceed 1% for the total and 0.5% for any specific harmonic.

C.6.3.1 Filter performance

The distortion levels as specified should be met for the following:

a) The continuous range of all system and environmental conditions.

b) Variation in total filter capacitance due to manufacturing tolerance, ambient temperature, aging, and changes in capacitance up to alarm level.

c) Variation in tolerance for STATCOM parameters, such as transformer winding unbalances, valve firing variations.

d) System frequency in the range of 48.5 Hz to 50.5 Hz. Calculation should take into account all possible combinations of STATCOMs,

C.6.3.2 Filter component rating

The harmonic filter components (and other STATCOM components) should be rated to carry continuously the harmonic currents caused by the background harmonic distortion of the system and the harmonic currents produced by the STATCOM itself. Unless otherwise specified, harmonic currents from the system and the STATCOM of the same order should be added arithmetically. All filter harmonic currents of different order should be added quadratically (root sum of squares).

The rated voltage of capacitors should be derived from the largest arithmetic sum of the power-frequency and individual harmonic voltages obtained from stress calculations in continuous operating conditions (Note: Maximum fundamental voltage and maximum harmonic contributions may not exist at the same time for STATCOM configurations).

For filter capacitor voltage rating, the loss of capacitor unit or elements should be considered up to the trip level.

The rated voltage of so-called "low voltage" capacitors (e.g. in double or triple tuned filters) should be chosen such as to also withstand imposed transient stresses from faults, energization, or other switching events.

C.6.3.3 Harmonic at PCC

The STATCOM Station’s contribution to the harmonic distortion levels at the STATCOM Station connection point (PCC) to the transmission system shall not exceed the limits defined in IEEE-2800 standard.

C.6.3.4 Harmonic calculation:

Chapter 7.3 of CIGRE Publication 139 together with information in PSSE network files given shall be used for the Network harmonic impedance.

C.6.4 MV Switchyard

- Medium Voltage (MV) delta bus shall be grounded through a Grounding Transformer (i.e. zig-zag winding Transformer) along with a suitable resistor in the neutral.
- MV Switchyard of different STATCOM Station branches shall be fenced with a fence height of three (3) meter. To minimize the probability of electrical fault suitable arrangement i.e. electrified fence shall be done to prevent the encroachment of unwanted animals or other to minimize the probability of electrical faults (Ph-E, Ph-Ph). Further bus bar arrangements shall be made in a way to minimize the probability of electrical faults.
- Secondary side of the Coupling Transformer shall be provided with suitable surge capacitors to mitigate transfer surges.
- For MV bus bar, an Aluminum conductor (Tube, Rectangular Hollow Section or C Section) may be used, however, a suitable bus bar end cover/cap shall be provided to avoid any animal/bird entering the hollow space.

C.6.5 Broadband Interference

C.6.5.1 Radio Interference

The TSP shall take necessary precautions in the form of shielding of valve hall and building or Containers to meet its own requirement together with any requirements that may be specified in Section-Project. Further, the following requirements shall also be met:

a) With the STATCOM Station operating at any load up to rated value and within the design range of firing angle, the radio interference level from electromagnetic or electrostatic inductions generated by the STATCOM station shall not exceed 100 micro-volts/m, under fair weather conditions, at 500 m away from STATCOM fence or boundary of the substation whichever is higher. The Radio Interference Level (RIL) criteria shall be achieved at all frequencies within the range of 150 kHz to 300 MHz and with the STATCOM operation at any level up to and including rated value, The design shall provide correcting measures, in case the specified design is not being realized in the final installation. In case of any third-party complaints about the radio interference, suitable measures shall be implemented by the TSP.

b) Measurements of actual RI at STATCOM Station shall be made by the TSP, at points along the above defined contour and at other critical points.

c) RIV (Radio Interference voltage) measured at a phase to ground voltage (266 kV rms) in accordance to NEMA-107 shall not be more than 500 micro-volts for 400 kV system. For other system voltages, IEC/NEMA in the order of preference shall be applicable.

C.6.5.2 Interference with Power Line carrier and open wire carrier system

The TSP shall take the necessary precautions in the form of noise suppression techniques and filtering devices to prevent harmful interferences from STATCOM Station to the power line carrier communication (PLCC) system operating on connected AC transmission network.

The frequency spectra to be protected are:

System	Frequency spectrum
Power Line Carrier	30 kHz to 500 kHz
Open Wire Carrier	5 kHz to 30 kHz

C.6.6 Audible Noise

The TSP shall limit the audible noise in various areas of the STATCOM Station buildings and containers to the following values.

Valve hall (Inside)	90 dBA
Mechanical equipment areas indoor (measured at 2 meter distance)	75 dBA
Mechanical equipment outdoor (Measured at 15 m distance)	75 dBA
Control Room Building*	60 dBA
At the limits of the STATCOM STATION perimeter fence	80 dBA

**This is the background noise from the ventilation system in adjacent rooms, control cubicles etc. Printers, recorders may be switched off during the measurement.*

C.6.7 Loss Requirements

C.6.7.1 The TSP must guarantee the total losses of STATCOM Station, be less than 1% of the reactive power output individually at its inductive limit and capacitive limit for the cumulative highest reactive power output of STATCOM Station at PCC with the worse combination of manufacturing tolerances. For the purpose of total loss measurements, it should be assumed that the ambient temperature is 20 °C, the PCC voltage is 1 per unit, and the slope setting is 1%. The STATCOM system may not operate under these conditions, but they provide a common base.

C.6.7.2 The total losses shall include all components, as well as different parts or subsystems of the complete STATCOM Station such as coupling transformer, All VSC systems and components, Control and protection systems, including ancillary devices such as HMI, fault recorders, and SCADA, Auxiliary Power supply systems, cooling systems, Building ancillary services such as lighting, air conditioning, heating, and ventilation. It may be noted that for the redundant VSC valve levels and dual/redundant control and protection systems, the losses of redundant VSC valve levels and dual control and protection systems shall be considered during loss measurement.

C.6.7.3 For the dual or redundant systems design of STATCOM Station, such as dual pumps or redundant fans, dual systems losses are to be excluded, if the dual system is not in service during the normal operation of the STATCOM Station. However, dual systems should be included if they are required to be in service under the defined operating conditions. The same methodology shall be applied for HVAC (heating ventilation and air conditioning systems).

C.6.7.4 The TSP is required to prepare documentation for the detailed calculation of total losses based on measurement during Factory Acceptance Tests of major equipment and systems mentioned above as per relevant IS/IEC/IEEE standards and the same shall be preserved and to be submitted to CEA/CTU/GRID-INDIA, as per their requirement. Further for equipment/systems, whose loss measurement cannot be done during Factory Acceptance Test, the same can be measured at the site, and a combination of calculation and measurement shall be used to derive the total losses as specified above. During Loss measurement, all fans, and pumps; valve room and control room air-conditioning system shall be switched on. However, redundant fans, pumps and air-conditioners shall be kept off during loss measurement.

C.6.7.5 During the factory tests the losses for the following equipment shall be measured/ assessed as detailed below:

Coupling transformer:

Losses shall be measured at factory/lab at the maximum rating, at power frequency as per relevant IEC/IS under below mentioned conditions:

i. No load loss (Iron loss) at rated voltage and fundamental frequency.

ii. Load loss (copper loss) at rating corresponding to maximum continuous current and at 75 °C.

iii. Transformer cooling equipment's loss (Auxiliary loss) at rated voltage and fundamental frequency.

Reactors:

The losses shall be measured at the factory/lab at the maximum rating at power frequency as per relevant IEC/IS.

VSC Valves:

Converter losses comprise the losses in power electronic switches [insulated gate bipolar transistor (IGBT) or equivalent], made up of conduction and switching losses, and the losses in DC capacitors, resistors, and inductors used within the converter system. Refer IEEE-1052 for calculating VSC losses.

Capacitor:

The capacitor losses shall be measured at the manufacturer's works at power frequency as well as calculated to obtain the losses in the complete bank on the basis of factory measurement.

Auxiliary System:

Auxiliary power losses shall be calculated from the kW and efficiency of all motors (name plate rating) of the cooling system, air conditioning, ventilation etc. The higher of the total losses for the entire auxiliary systems occurring at full capacitive capacity MVAr or full Inductive MVAr as the case may be shall be considered for arriving at the total losses.

Harmonic Filters, if any:

The losses shall be calculated at the maximum STATCOM Station loading at 400 kV and 50 Hz.

The calculations shall be on the basis of the tested results of the components.

C.6.8 Selection of Insulation Levels

C.6.8.1 Arresters:

Protective levels of arresters connected to the 400 kV AC Bus Bars of the STATCOM Station shall be coordinated with the insulation and surge arrester Characteristics of the 400 kV AC systems to which the STATCOM Station is to be connected. The specification and characteristics of the surge arresters installed in 400 kV AC system is given in the Substation specifications. The front of wave (FWWL), lightning impulse (LIWL) and switching impulse withstand levels (SIWL) shall be determined by the following margins:

a) A SIWL at least 1.15 times the switching impulse protection level.

b) A LIWL which is an IEC standard level corresponding to the SIWL and shall be at least 1.25 times the lightning impulse protection level.

c) A FWWL which is at least 1.25 times the front of wave protection level.

In addition to the above minimum basic requirement, the various insulation levels of 400 kV equipment shall be as below. The STATCOM Station equipment, coupling transformers etc. shall be co-ordinated accordingly.

Description	SIWL	LIWL
All equipment other than Transformer Bushing and winding	1050 kVp	1425 kVp
Transformer Winding	1175 kVp	1425 kVp
Transformer Bushing	1175 kVp	1550 kVp

C.6.8.2 Valves

The requirement of insulation levels of the valves shall be as per the design requirement.

C.6.8.3 Air clearances

The air clearances shall be determined by the TSP based on the required withstand levels for all waveforms in order to limit the probability of flashover within the STATCOM Station to a target value of one flashover in 15 years.

C.6.8.4 Switchyard

The air clearances for switchyard equipment shall be equal to or greater than the minimum values as specified in IEC-60071. Altitude correction factor (if any) shall also be considered as per IEC.

C.6.8.5 Leakage distances

The Creepage/leakage distance across insulation shall be determined by the TSP and shall be adequate to ensure that under conditions of heavy pollution, the probability of a flashover of an insulator does not exceed one in 15 years. However, the leakage distance for all AC insulators for outdoor installation shall not be less than 31 mm/kV of the maximum operating phase to earth rms voltage at the insulator. The leakage distance of equipment connected to 400 kV systems shall not be less than 13020 mm.

Specific creepage distance for outdoor bushings, insulator strings and long rod insulators shall be a minimum 31 mm/kV.

C.6.9 STATCOM Station availability and reliability

The following definitions apply:

C.6.9.1 Outage terms:

a) Outage

The stage in which equipment is unavailable for normal operation due to an event directly related to the equipment which results in a reduction in STATCOM Station capacity.

b) Scheduled Outage

An outage that can be scheduled at least one week in advance.

c) Forced outage

The stage in which the equipment is unavailable for normal operation but is not in the scheduled outage stage and which results in a reduction in STATCOM Station capacity i.e. an outage which is not scheduled outage.

C.6.9.2 Capacity terms

Maximum Continuous Capacity (Pm)

The maximum STATCOM Station capacity (MVAr) for which continuous operation under normal conditions is possible.

C.6.9.3 Outage duration terms

Actual Outage Duration (AOD)
The time elapsed in hours between the start and end of an outage.

C.6.9.4 Time Categories

a) The number of hours in the reporting period in a full year, the period year is 8760 hours. If the equipment is commissioned, part way through a year, the period hours will be proportionately less than 8760 hours.

b) Total Outage Hour (TOH)

The sum of all outage duration within the reporting period. TOH = AOD

C.6.9.5 Availability and Reliability Terms

Unavailability:

Unavailability is the duration for which the STATCOM Station is not available with a specified rating due to forced outages per year. If part of the station is unavailable, then the unavailability duration shall be counted proportionally. However, if STATCOM is out then its duration shall count as a fully unavailable STATCOM Station. However, if the STATCOM unit is out then the STATCOM Station unavailability shall be counted proportionally to STATCOM capacity. STATCOM Station Control system outage shall count as full STATCOM Station unavailability.

'OF' is the Outage Frequency which will be the number of forced outages per year.

The period basis for availability and reliability calculations shall be 12 months. The TSP shall ensure that the design will meet the specified guaranteed and design target value of availability and reliability.

Outage times for repair, maintenance and replacement of components shall be based on the premise that all items in the list of recommended spare parts are on hand, and that all maintenance schedules of recommended maintenance are adhered to. Reliability calculations shall be made and shall be presented as the expected frequency of unscheduled loss of STATCOM Station capacity. For simultaneous occurrence of events, for either of which a loss of capacity would result, the longer repair time shall be counted.

The facilities shall be assumed to be utilized 100% of the time at 100% load, regardless of the actual reactive power generated/absorbed by the STATCOM Station. Hence the availability and reliability assessment will be based on the capability of STATCOM Station to generate/absorb the rated reactive power regardless of whether, it is in service or not.

C.6.9.6 <u>Availability Requirement</u>

The calculated availability of the system considered on an annual basis shall be equal to or exceed the following target values.

Minimum availability requirement of each complete STATCOM Station

- Guaranteed for STATCOM Station - 98%

The outages of STATCOM Station capacity caused by the failure of equipment outside the scope of the TSP shall not be considered for the calculation of availability and reliability guarantee. However, such outages shall be restricted to

1) Complete loss to 400 kV supply (at PCC)

2) Human Error.

Circumstances causing curtailment of STATCOM Station capacity that will be included in reliability and availability assessment and which can lead to forced outages shall include but not be limited to the following:

a) Failure of equipment

b) Mal-operation of control and protection system

c) Failure to start

d) Reduction in capacity.

C.6.9.7 **Reliability Requirement**

a) Reliability

In the assessment of reliability, the following events shall also be considered to constitute a STATCOM Station outage:

i) A STATCOM Station shut down.

ii) A reduction of STATCOM Station capacity due to an outage of any component of STATCOM Station

The calculated reliability of the complete STATCOM Station shall be equal to or exceed the following design target values.

The average outage frequency per year for each STATCOM Station shall not exceed the following values:

	Design target for STATCOM Station	Max acceptable Guaranteed value for STATCOM Station
Total Number of Forced Outages	3 x Nos. of STATCOM Station	5 x Nos. of STATCOM Station

C.6.9.8 GUARANTEED FAILURE RATE OF Sub-modules. (Including all components and electronic). The maximum annual guaranteed failure rate of sub module (including all components and electronic) shall not exceed 1.0% per STATCOM. The failure rate shall not include failures directly attributable to operation and maintenance errors.

C.6.9.9 GUARANTEED VALUE OF FAILURE RATE OF AC POWER CAPACITOR

The maximum guaranteed annual capacitor failure rate shall not exceed 0.15% except for first unit failure. The capacitor shall be considered as failed if its Capacitance value varies more than ±5% of the (actually measured) name plate value. Leakage of oil from the capacitor and the deformation of the capacitor unit shall be considered as a failure even if the capacitance value is within the tolerance limits.

C.7 Design Principles

The objective for the design of the STATCOM Station shall be to achieve a high level of availability and reliability as specified. Special attention shall be given to designing the STATCOM Station to avoid forced outages. The TSP shall conduct thorough design reviews to ensure the minimum risk of such outages. The TSP shall give careful attention to related factors affecting STATCOM Station performance such as subsystem and system testing, protective relays co-ordination and proper setting of relays.

Except where greater reliability requirements are specified in these specifications, the design basis for STATCOM Station shall be such that no single contingency downstream from the medium voltage bus shall cause a total outage of the STATCOM Station. The following general criteria shall be followed for the design of the control system:

a) Use of components similar to those whose reliability has already been proved in use.

b) Use of good design practices, surge protection, filtering, and interference buffers to assure immunity to sensitive components and circuits against damage and interference by induced voltages and currents in the external cabling and cubicle wiring.

c) Use of fail-safe and self-checking design features.

d) Use of component and equipment redundancy, by means of either duplication or triplication with automatic transfer facilities wherever necessary to meet the requirement of these specifications.

e) Design which in the event of component failures, provides for transfer to a less complex operating mode.

f) Provision of alarm, fault diagnosis and indication

C.8 STATCOM Station Main Components

C.8.1 STATCOM Unit

The main electrical data of the STATCOM Units are the following:

- Rated voltage — 20 kV Minimum
- Rated frequency — 50 Hz
- Redundancy (Sub Module) — 2 Nos. or 5% whichever is higher

- Rated Power of each STATCOM unit/Branch ±50 MVAr Minimum
- Valve Cooling Deionized/Demineralized water

In general, the STATCOM units shall equally share the load however under contingency conditions it should be possible to run the units with unequal load. Charging of the DC capacitors of Sub module during the initial start-up shall be achieved by means of Resistors and bypass breaker arrangement. The charging resistor for DC capacitor of the STATCOM Sub module should be designed for three charges per hour followed by the appropriate cooling time. Power for the gate level control shall be derived internally from Sub module. The offered STATCOM Units with their Control system shall be suitably located inside the STATCOM Station Building.

C.8.1.1 STATCOM Valve

The valve shall be designed to meet the performance requirements described in this specification and as described below.

In order to ensure a modern low loss and reliable solution, the STATCOM valve assembly shall use the multi-module (including redundant sub-modules) approach.

The valves shall be designed to ensure satisfactory operation according to the overall performance requirements and include all necessary auxiliary equipment required for smooth and reliable operation. The valves shall be indoor air-insulated and cooled by de-mineralized water. The valves shall be of modular design and have removable Sub-Module for ease of maintenance. The valves shall be mounted to allow easy access for visual inspection, routine maintenance and replacement, and facilities shall be provided to enable easy access.

C.8.1.2 Semiconductor Switches

The electronic switches should be designed with the aim to achieve operation according to the overall performance requirements of the STATCOM Station. The valve shall be designed with individual semiconductor switches applied in a conservative manner with regard to their basic design parameters. The semiconductor switch shall meet the requirements of IEC 60747 except where otherwise specified herein.

The semiconductor switches shall be designed to withstand all stresses expected under steady state, transient and temporary overvoltage conditions. Basic semiconductor devices shall be of the Press Pack type, or packaged to provide short circuit means in case of device failure such that the STATCOM can continue to operate without interruption. The adjacent sub-module should be protected against the possible explosion of the semiconductor switch.

Under the restriction of redundancy (minimum two or 5% whichever is higher) i.e. the failure of any semiconductor switch or sub module or monitoring device etc shall not prevent continued system operation. In the event of any of the above failures, the STATCOM shall annunciate and identify the specific location of the failed device and continue operation until such time as repairs can be scheduled. During such time till the next shutdown can be availed, the STATCOM must continue to operate without downgrading STATCOM capability.

The switching device's design should include an appropriate allowance for unequal voltage distribution across individual devices in the valve due to the stray capacitor and component tolerances.

Each switching device should be able to operate within component ratings, generally with at least two failed sub-module or levels. The number of possible failed sub-modules or levels as specified shall be consistent with the availability requirements of the STATCOM system.

C.8.1.3 Sub module for Multi-Module Topology

The key element of the multi-module topology shall be the sub-module. By increasing the number of these sub-modules, it is possible to obtain high voltage with extremely low harmonic distortion and very low dv/dt using a low switching frequency that reduces power losses. Sub-module shall have the following characteristics:

VSC sub-modules should be protected against over voltages with appropriate strategies. A description of the failure mode of the switching device and the strategies used for failure should be provided.

In each fiber optic cable (having multiple fiber cores) used for control/communication purposes of sub-module at least two fiber cores shall remain available as spare for future use.

C.8.1.4 The STATCOM sub-module has DC capacitors that require a charge to allow full functionality and performance. At the startup of the STATCOM Station, the capacitors are discharged. During the energization sequence of the STATCOM, Capacitors are charged from the main power grid via resistor operated in series to the main connection circuits. Once the desired charging voltages are reached, the charging resistor circuit is bypassed using a bypass switch/breaker.

The Type and Rating of the charging resistor and associated bypass switch shall be designed with the aim to achieve operation according to the overall performance requirements of the STATCOM Station and shall conform to the relevant Standard.

C.8.1.5 STATCOM Valve Cooling system

A closed-loop recirculating system shall be provided with full heat rejection capacity with redundancy for pumps, heat exchangers, and fans, appropriate to the STATCOM Station availability requirements. The cooling system should be able to maintain full capacity at maximum ambient temperature and maximum STATCOM reactive power output. The cooling system should be able to operate at the lowest ambient temperature and zero output specified. The Valve cooling system shall have black start capability and necessary Uninterruptible Power Supply (UPS)/ Uninterruptible Motor Drives (UMD) shall be provided separately for each STATCOM Unit.

The valve cooling system shall be designed to meet the performance requirements described in this specification and as described below.

a) Each STATCOM Unit shall have its own de-ionized water valve cooling system with redundant pumps.

b) For cooling the STATCOM valves, a deionized re-circulating (closed loop) water system shall be used.

c) Water to air heat exchanger shall be used for cooling of this de-ionized water. Water to water heat exchanger shall not be employed.

d) System shall be designed such that no shut down of STATCOM be resorted to for making up the deionized water in the system. The make-up water should comply with the recommended pH and purity.

e) Cooling water shall have a constant flow rate irrespective of loading. The flow rate shall be decided on the basis of extreme operating conditions.

f) The control system for the cooling system shall be redundant type including the provision of redundant control supply and main power supply. However, in place of the redundant control system for the cooling system, suitable alternate mode is also acceptable meeting the requirement of fulfilling cooling system operation even if failure of cooling control system.

g) 2x100% pumps with one as standby shall be provided for the primary. In case a pump failure occur, the second pump shall automatically switch in without shutting down the STATCOM. An alarm shall be displayed at the control panel for the failure of the first pump and standby pump in operation.

h) Each cooling system shall be provided with an independent/dedicated UMD supply however common battery for both UMD power supply may be accepted. An UMD system will provide an extended capability of the STATCOM Station to deliver reactive power without any interruption, adding a buffer against the system faults or during events such as delayed voltage recovery or Transient Over Voltage (TOV).

i) The secondary cooling system shall be a redundant type such that it shall be possible to take out 10% (minimum one number) of the cooler module (fan unit) of secondary cooling system without affecting the rated performance of STATCOM).

j) Normally no make-up water shall be required however in case of expansion vessel level going low; the same shall be replenished automatically by means the of make-up water tank and make up water pump to be supplied with the system.

k) TSP shall provide a water treatment plant of sufficient capacity. The purification (treatment) system shall be designed to maintain conductivity below 1 micro Siemens. A resistivity cell in the outgoing water from the deionizer should detect the depletion of ionized material. Filters and deionizers shall be designed to allow replacement during operation. Normal replacement shall not be required more than once every year.

l) Filters and deionizer/deoxidizer material shall be designed to allow replacement within minutes without shutdown of the cooling unit. (Normal replacement should not be required more than once/year).

m) Primary cooling system shall monitor its own operation and condition of cooling water.

n) The protection system of the cooling cycle shall have minimum following alarms:

i) Depleted deionizing cell

ii) Low water resistivity

iii) High water temperature

iv) Primary pump stopped

v) Fan stopped

vi) Primary pump or fan interlock circuits faulty

vii) Primary cycle (Make-up water) tank level low

viii) Failure of control supply.

ix) UMD/UPS fault.

o) Following shutdown alarms / TRIP shall be provided with cooling system protection. Excessive low water resistivity excessive high water temperature, complete loss of auxiliary supply to primary pumps, low flow, low pressure etc.

p) The dissipative components of the converter are cooled with deionized water.

q) The power losses are transferred to the external ambient by means of a deionized water /air heat exchanger. All the piping and other components shall be provided. Complete instrumentation set including following shall be mounted on board in order to check the status of the cooling system:

- Conductivity gauge system.
- Flow meter equipped with two set points (alarm and trip).
- Pressure meter
- Two thermometers for the inlet and two thermometers for the outlet (two set points for alarm and trip)
- Thermostat

r) The status of the cooling system shall be monitored by means of the control system.

s) Replacement of certain cooling equipment (e.g. pumps, fans, cooler unit etc.), if defective, shall be possible while the cooling system still operates.

C.8.1.6 Tests on STATCOM Unit Valve

All applicable tests i.e. Operational Type Tests, Dielectric Type Tests and Test for valve insensitivity to electromagnetic disturbance and Production tests shall be done as per the latest edition of IEC 62927.

C.8.2 STATCOM Station Control equipment and operator interface

C.8.2.1 Control Equipment

The control systems should achieve the functional objectives given in 6.2. The accuracy of voltage should be within ± 1% of the reference voltage. The accuracy of the gradient and linearity of the slope delivered by the STATCOM Station should be defined in relation to the current deviation from the theoretical slope defined in 3.1. The maximum deviation should be less than ± 5% of the nominal current.

The control system design shall be based on a single fail criterion i.e. failure of any one component in the system should not result into outage of the complete system. As a minimum, a dual (hot standby) digital programmable controller shall be supplied for each STATCOM unit/branch and STATCOM Station to control the STATCOM, completely including the functions listed as mentioned below:

a. The controller shall have diagnostic and self-checking features for both itself and for valves, gate firing and drive circuits, interface hardware, and software. This is required to reduce outage times and to facilitate fault finding.

b. The Controller shall be reprogrammable. The Owner shall have at least the following possibility for changing the following reference and limit values via HMI:

c. Closed loop Controllers:

   The STATCOM Station controller shall have the means to modify the reference set points. This refers to the functionality that will allow all the control parameters to be adjustable within selectable limits and is inclusive of, but not limited to following:

   - Voltage controller
   - Q controller (reactive power controller).
   - Supplementary VSC current controller.
   - Other supplementary control functions.

d. Sequence Controllers:

   The sequence control and open-loop controllers shall include the control of all switchgears and associated control gear and external devices.

e. The Controller shall have at least 10% excess I/O capacity to allow future program upgrades to satisfy the changing requirements of the power systems or future extensions to the STATCOM Stations. As a minimum, a control of up to 4 future HV shunt devices (reactors or capacitors) shall be included in the offer.

f. All control signals available for remote control must also be available locally so as to ensure that a local operator can operate the STATCOM Station if the communications link between STATCOM Station and remote control centers is lost.

g. A changeover switch shall be provided for control of the selection of local or remote control.

h. TSP shall provide the equipment necessary for the purpose of control, protection and interlocking of all equipment within the scope of supply.

i. TSP shall be responsible for the design and coordination of control, protection and interlocking system and switching sequences within the STATCOM Station. All necessary interfacing required between AC switchyard equipment and STATCOM Station for the above purpose shall also be included in the scope of TSP.

j. It is proposed to control STATCOM through a Supervisory Control and Monitoring System (SCADA). All the data shall be acquired through suitable means from the field and various components and control is executed through the redundant HMI. The local STATCOM Station Control system shall consist of a redundant STATCOM Station controller, redundant HMI workstation, Gateway, STATCOM Station Control System Engineering cum Disturbance Recorder (DR), PC which can also be used as standby HMI workstations in case of emergency with associated peripheral equipment such as color laser log Printers, Color laser jet fault record printer, GPS System, Inverter / UPS etc. all interconnected via redundant Ethernet based Station LAN Network. Each work-stations and PCs at STATCOM Station shall have at least 19” LED display.

k. In addition to the above, HMI workstation (identical to HMI Workstation provided in the STATCOM Station control room) should also be provided in the control room of the main 400 kV substation. This HMI workstation should be powered from an independent UPS system adequate enough to provide power to the HMI workstation for a minimum two hours in case of auxiliary power failure.

l. The control equipment shall satisfy the reliability and availability requirements specified in this specification

m. All necessary measures shall be taken to ensure satisfactory operation in the presence of harmonic current and voltage, noise and radio interference signals. The equipment shall be designed to operate in the environmental conditions specified in the specification.

C.8.2.2 Operator Interface

a) Each STATCOM Station shall have a SCADA consisting of an HMI which shall provide a Centralized (local) operator control of the STATCOM Station functions. All human interface operations necessary for the control and monitoring of the STATCOM shall be provided at this point.

b) Any abnormal condition requiring operator action or intervention or maintenance on any of the STATCOM Station subsystems shall be annunciated at the STATCOM Station control room and the Substation control room.

c) The local HMI shall include the following diagrams as different screens in the display system:

   i. Complete STATCOM Units and STATCOM Station single line diagram including EHV and MV busses

-

ii. AC Auxiliary supply and distribution

iii. DC Auxiliary supply and distribution

iv. STATCOM Valve cooling systems

v. Interlocking system.

d) These diagrams shall indicate status, alarms, voltages, currents, etc. The HMI shall provide complete diagnostics on alarm and trip indications as required and discussed in this specification, including SER information.

e) A facility shall be provided whereby the local HMI features and functions shall be accessible from remote. A remote user shall be able to view screens and change STATCOM Station parameter settings.

f) As the substation where STATCOM Station shall be installed, will be equipped with Sub-station Automation System (SAS) conforming to IEC 61850, it is required that STATCOM Station control and monitoring shall be integrated with SAS at the main Sub-station by the TSP. It is proposed to connect STATCOM Station's SCADA with SAS through a Gateway and the database, configuration etc of the main substation SAS shall be upgraded to incorporate STATCOM Station events, alarms, Controls (both switchgear and control functions of STATCOM Station like the setting of parameters etc.) so that STATCOM Station can be effectively monitored and controlled from main substation SAS and shall be monitored from Load Dispatch Center (RLDC).

C.8.3 STATCOM Station Protection System

C.8.3.1 Protection system Design

a) To ensure that faults are cleared within stability critical clearing time, to minimize damage to the plant, and to avoid voltage collapse, loss of load, or load limitations, TSP shall provide a high speed main protection scheme. An independent (having a separate measurement system) back-up protection scheme shall be provided in the event of the main protection scheme failing or taken out for maintenance.

b) The STATCOM Station shall be completely self-protecting (unit protection). STATCOM Station shall be protected from damage for all conditions of over-current, overvoltage, excessive reactive power loading, unbalance due to loss of capacitor elements, phase-to-phase and phase-to-ground faults, three phase faults, loss of cooling, semiconductor valve or control malfunction, faults (STATCOM, MV system) in individual primary connected components of the STATCOM, HV system faults, etc. The STATCOM Station shall withstand the maximum fault current for a period of the maximum fault clearing time as specified, considering second contingency cases due to the previously mentioned conditions.

c) All protection equipment and systems should be properly co-ordinated to prevent incorrect operations of the protection equipment or systems during normal STATCOM Station operation, including anticipated abnormal conditions on the transmission system, as specified. Fail-safe principles should be applied throughout.

C.8.3.2 The basic principle and order of precedence for the control and protection shall be, to take care of the following:

- Correctly identify a fault, problem or error condition,
- Only if necessary, isolate the minimum number of components, subsystems whenever possible,
- Utilize degraded modes to the maximum extent possible either directly (no interruption of the STATCOM Station operation) or indirectly (by tripping the STATCOM Station momentarily in order to isolate the branch and re-energization of the STATCOM Station).
- Trip STATCOM Station and Block.

a) Failure of the STATCOM Station Interface (SCADA interface) shall not result in a Protection trip of the STATCOM Station. A fail-safe philosophy shall be implemented to allow the STATCOM Station to operate safely and independently from the STATCOM Station Interface (SCADA interface).

b) Protection equipment shall be designed and applied to provide maximum discrimination between faulty and healthy circuits.

c) The Protection shall be sufficiently sensitive to cater to the full range from maximum to minimum fault level conditions. The Protection shall also be suitable for a system fault level equal to the maximum short circuit capacity of the substation. All current transformer designs shall be based on these fault levels.

d) All required protective, control devices, etc including auxiliary instrument transformers and panels, relays, cabling, wiring, indication, and all other associated plant and material necessary for the effective operation of the protection systems shall be supplied and installed by TSP.

e) The protective relays shall be microprocessor based. Relays shall have approved characteristics and be mounted in dust and moisture-proof cases. The protective relays shall be provided with visual indications for starting, tripping and failure of the protective function. The LEDs shall be reset without opening the covers. The protection relays shall also be equipped with HMI facilities suitable for manual parameter settings and viewing of the settings. Relays with provision for manual operation from outside the case, other than for resetting, are not acceptable. Relay settings shall be visible and readable without having to remove the relay cover. Relays shall be of approved construction and shall be arranged so that adjustments, testing and replacement can be effected with the minimum of time and labor. Auxiliary Relays of the hand reset type, if provided shall be capable of being reset without opening the case. Electrically reset tripping relays shall be provided as

necessitated by the system of control, such as for those circuits subject to remote supervisory control.

f) Relay contacts shall be suitable for making and breaking the maximum currents which, they may be required to control in normal service but where contacts of the protective relays are unable to deal directly with the tripping currents, approved Auxiliary tripping relays shall be provided. In such cases, the number of auxiliary tripping relays operating in tandem shall be kept to a minimum in order to achieve fast and reliable fault clearance times. Separate contacts shall be provided for alarm and tripping functions. Relay contacts shall make firmly without bounce and the whole of the relay mechanisms shall be as far as possible unaffected by vibration or external magnetic fields

g) Steps shall be taken to protect the circuitry from externally impressed transient voltages which could reach the circuitry via connections to instrument transformers or the station battery. The routing of cables should be such as to limit interference to a minimum. Any auxiliary supplies necessary to power solid-state circuits shall be derived from the main station battery and not from batteries internal to the protection.

h) **Relay communication**

The Relays shall also have a communication port provided on the front of the relay for configuration and parameter settings as well as downloading of data. A direct port suitable for remote communication shall also be provided at the back of the Relay. This port shall conform to IEC - 61850.

i) **Tripping schemes**

- Tripping of MV circuit breakers shall be done by means of two-separated trip signals.
- Duplicate high security tripping circuits for MV Circuit Breaker shall comprise two independent high speed (less than 10 ms) high burden (greater than 150 W) tripping relays for each circuit, each with its own independent DC supply. The trip circuits for all circuit breakers need to be equipped with a “lockout” function and it shall be possible for this to be reset manually and remotely by the operator.

j) The protection for the power system is based on a normal switching state and an occurrence of a single fault. This means that faults resulting from maintenance as well as the simultaneous occurrence of two or more faults are not taken into account.

k) The input circuits of the digital protections shall be monitored by means of a plausibility check. If any incorrect information is found, the protection function shall be blocked by the protection system. All protection relays shall have facilities for monitoring trip circuits. Detection of an interruption in the case of a switched on circuit breaker shall be signaled.

l) **Test facilities**

- It shall be possible to test the protective device during operation without causing trips. Links shall be provided for the isolation of individual protection trip circuits and the common protection trip circuit to each circuit breaker trip coil.
- Separate test facilities shall be provided for each current and voltage transformer secondary circuit so as to give access for testing of protection relays and associated circuits. The Test facility to be supplied shall have two selectable positions, a Service and a Test position. In the service Position, the test switch connects CTs and VTs signals to the Relays and trip commands to the circuit breaker trip coils. In the Test Position, the test switch applies a short-circuit to the Current Transformer (CT) secondary windings and open circuits the VT secondary cores and allow injection of secondary current and voltage into the relay. At the same time, the Trip commands to the Circuit Breaker Trip Coils are isolated. The test switch supplied shall be to the Approval of the Owner.

m) The protection of the electrical system shall be designed and installed in such a way that the failed equipment is disconnected selectively and automatically. All equipment have to remain operative during transient phenomena, which may arise during switching or other disturbances to the system.

n) **Auxiliary DC Supplies**

- The protection concept has to be designed in a way so that back-up protection is provided at all times. All protection relays shall be configured in a way that failure of one Auxiliary DC system will not affect the relay. If all DC supplies to the controllers are lost, the STATCOM Station breaker must be tripped via the protection panel.

o) **Electromagnetic Compatibility**

- Electronic Relays and other electronic devices and the ancillary circuits connected to them, such as power supplies, current and voltage transformer secondaries, status or tripping or alarm circuits shall be designed to ensure that they are compatible for use in the hostile electrical environment found in an MV or HV substation.
- Adequate steps by means of suitable design, shall be taken to prevent Electromagnetic Interference (EMI), (generated by sources such as circuit breakers, disconnectors, lightning, radio or radar emissions, switching contactors in DC circuits etc) or Electrostatic Discharges (ESD) from affecting relay performance or causing damage to components.
- All relays offered shall therefore have been type-tested to meet the current requirements of IEC Standards with respect to High Frequency disturbance, Fast Transients, Electrostatic Discharge, Radio Frequency Interference testing etc.

p) List of Protection functions for STATCOM Station

<u>Coupling Transformer Protection:</u>

i) Biased Differential protection (87T)
ii) REF protection (64T)
iii) Overcurrent protection (50, 51)
iv) Ground Overcurrent (51N)
v) Over flux protection (HV and MV)
vi) Transformer mechanical trips

STATCOM MV Bus Protection:

i) Bus Differential protection (87)
ii) Ground over current protection (51N), used with a neutral Grounding Transformer
iii) Under / Over Voltage (59 Ph-Ph) protection
iv) Over voltage (Open Delta) protection

STATCOM Branch Protection:

i) Differential protection (87)
ii) Overload protection (49)
iii) Overcurrent protection inside delta (50, 51)
iv) Negative phase sequence protection (46)
v) STATCOM branch overcurrent protection (50, 51, 50N, 51N)

- The protection functions listed above are the minimum set of function to be provided, any additional protection required to fulfill the requirement of the protection system shall also be provided.
- Further protection functions of individual branch (STATCOM) shall trip the respective branch MV CB (Circuit Breaker).
- All CBs shall be provided with individual Breaker Failure protection relays. Breaker Failure relay shall have the logic based on the current signal or CB close open status.
- Any fault on MV bus will trip the 400 kV breaker. However, any branch fault shall be cleared by the respective MV branch Circuit Breaker.
- Protection System for the STATCOM valve portion of the STATCOM station shall be provided in the redundant controllers to isolate the STATCOM valve during internal overload/overvoltage, ground fault etc.

C.8.4 STATCOM Station Fault Recording System

An integrated Transient Fault Recording (TFR) System shall be supplied, installed and commissioned. This shall include trigger level settings for analog signal, etc. subject to review and comment. Disturbance and event recording facilities are required for local monitoring of the STATCOM following a disturbance on the power system or the STATCOM System. The TFR shall be GPS/NavIC synchronized.

The following inputs are required:

- All analog signals (output signals) including 3-ph and sequence values of voltage, control.
- All digital signals (control outputs, status indications, commands, alarms, and trip

indications). Internal STATCOM Station control signals/variables to be selectable.

- The accuracy of the TFR for event inputs shall be at least 100 µs (sampling rate of minimum 10 kHz).
- The TFR shall have provision for remote access and retrieval of recorded information onto a PC. For this purpose, a communication link to the substation LAN shall be implemented.
- The remote software application for data retrieval shall be included.
- There shall be multiple channels to view 3-ph and sequence values of voltage, current.
- TFR file shall be viewable in any open source software.

C.8.5 Air Core Reactors (as applicable)

a) Reactors shall be air core, dry type, be suitable for outdoor installation and there shall be no tapping on the reactors. The insulation level shall be adequate and TSP has to ensure proper insulation coordination.

b) The insulation of the reactor shall be class F and hot spot temperature rise shall not exceed 105 °C above ambient temperature. Winding temperature rise shall not exceed 80 °C above ambient temperature.

c) The reactor shall be designed to withstand thermal dynamic shocks and mechanical shocks while in service and during erection.

d) The reactor shall fully conform to the relevant IEC standard.

e) The reactor shall be designed to withstand overloading due to over voltage as specified and shall also be subjected to excitation by harmonics; the reactor must be able to withstand such events without deterioration in normal life.

f) The reactors shall be subjected to type and routine tests in accordance with the latest issue of IEC-60076 as appropriate to the type of reactor provided.

g) Tests on Reactors: The reactors shall be subjected to type and routine tests in accordance with the latest issue of IEC-60076 as appropriate to the type of reactor provided.

C.8.6 AC POWER CAPACITORS (as applicable)

i) General

a) The capacitor banks shall comprise capacitor units, discharge devices, protection equipment, series reactor as required, earthing switches, suitably connected in series and parallel, mounted at ground level with protected fencing all around. The number, arrangement and connection of capacitor banks shall be designed to suit the requirement of the compensator as a whole. If convenient, the capacitor banks may be used in conjunction with reactors. In this event, the rating of the capacitor shall be adequate to cope up with the harmonic loading. The frequency variations shall also be considered. To limit the peak inrush current for switching in the capacitors, current limiting reactors with

parallel connected damping resistors, if required shall be connected in series with shunt capacitor banks.

b) The capacitors shall be provided with internal-type fuses. Alternatively, the fuse less capacitor is also acceptable.

c) Fuses shall not melt nor shall deteriorate when subjected to the inrush current during the life of the capacitor bank.

d) With the capacitor charged to a peak voltage, the fuses associated with the healthy elements shall not melt when carrying the discharge current resulting from a breakdown of an element or from an external short circuit.

e) Fuses shall be capable of disconnecting a faulty element over a range of voltage across the unit terminals from 0.9 Un to 2.0 Un. In addition, if all the elements in the same row of an internally fused capacitor were to fail as a result of a cascading action, the last fuse element to melt shall be capable of successful disconnection with a voltage of not less than 1.5 times.

f) After fuse operation the fuse assembly shall be able to withstand continuously at least 1.5 times the rated unit voltage Un across the gap for 10 Seconds.

g) Fuses shall preferably be of the current limiting type but fuse system shall in any event be designed to ensure that energy released into a faulty capacitor unit is less than the valve that will cause rupture or bursting of the container.

h) The capacitor units shall be the outdoor type. The container of the capacitor shall be of stainless steel.

i) Each capacitor unit shall be readily accessible and replaceable without disturbing any other unit. The supporting frames shall be designed to provide adequate ventilation to the units.

j) The dielectric fluid used in the capacitor unit shall be environmentally safe and bio-degradable, non-toxic. Polychlorinated Biphenyle (PCB) type dielectric or any of its derivatives shall not be acceptable.

ii) Construction and Design Requirement

a) The capacitors shall conform to IEC-60871. The capacitors shall be provided with internally mounted discharge resisters with characteristics in accordance with IEC-60871.

b) The current limiting reactors (as required) shall be dry type and connected in series with the capacitor bank. Suitable lifting lugs shall be provided.

c) The capacitor enclosure shall have sufficient strength to withstand without damage or loss of life, mechanical load, both in operation and during erection. The loads shall include electromagnetic forces including those during faults external or internal to the capacitor bank, wind loading, forces due to expansion and contraction caused by ambient temperature and load variation, and seismic effects all as specified.

d) The capacitor units shall be interchangeable in order to reduce the spare requirements and simplify maintenance procedures.

e) The capacitor stack shall be vibration free. The stack shall have a fixed potential, which is connected to one electrical point in the bank. The stack shall be of galvanized structural steel.

f) The capacitor racks shall be supplied complete with all capacitor units, insulators, and connections and shall be equipped with lifting lugs/eyes to facilitate assembly into the stacks. The racks shall be constructed of galvanized structural steel. No drilling of galvanized steel shall be allowed. Each rack shall be labeled with the weight of the fully equipped racks, the phase, and the bank of which it forms a part. The maximum and minimum capacitor unit capacitance which may be substituted into the racks as spares shall be suitably identified. Suitable warning labels shall be affixed.

g) The capacitor shall be specially designed to be suitable for intermittent duty.

h) The capacitors should comply with the overload capacity as per NEMA Standard.

i) The capacitor elements shall be vacuum dried inside the case prior to impregnation with dielectric fluid. After impregnation, the capacitor unit shall be sealed immediately upon removal of the impregnated reservoir.

j) The discharge resister shall discharge the unit from peak operating voltage to less than 75 Volts within 10 minutes.

k) The capacitor case shall be made from type 409 stainless steel or equivalent stainless steel with all joints welded and tested for leaks.

l) All racks and bus insulators as well as the insulators used to insulate each stack of capacitor from ground level shall be pincap or post type. The minimum voltage rating shall be 15 kV and low frequency wet withstand voltage of all insulators used to insulate within or between the capacitor rack of a stack shall not be less than three times the actual voltage stress across the insulators. The insulator shall be outdoor type manufactured from wet porcelain. The insulators shall be bolted to the top members of the frame to support electric-grade aluminum buses.

m) The size and groupings of the individual capacitor units shall be such that a single blown fuse will not cause the voltage across the parallel group to rise by more than 10%.

n) The redundancy to be provided, shall be as per the requirement specified regarding reliability and availability in the clause mentioned elsewhere.

iii) Capacitor Unit Failure Detection

The stages of capacitor units or element failure detection shall be provided as below:

a) A three-step unbalanced current protection shall be provided in each capacitor bank to initially generate an alarm when the unbalance limit is reached and finally to trip the bank in case of the limit is exceeded.

b) The first stage shall generate an alarm and the capacitor unit shall continue in service. It may be assumed that the bank shall be disconnected for maintenance within 2 weeks.

c) The second stage shall generate a separate alarm and a delayed trip signal which will disconnect the bank after two hours.

d) The third stage shall cause immediate disconnection of the Capacitor Bank.

iv) Tests on Capacitors

All the tests on capacitor units shall be in accordance with the latest issue of IEC 60871.

C.8.7 Coupling Transformer

The TSP shall provide single phase coupling transformers to operate as 3- phase bank with one unit as a common spare with necessary auxiliary arrangements for stepping down the voltage from 400 kV system to a suitable medium voltage value as required for replacing any one of the faulty phase units without physically shifting the transformer. The Medium Voltage side of the coupling transformer to couple with the STATCOM shall not be less than 20 kV to ensure optimum power transformation.

The Coupling Transformer shall be designed with the aim to achieve operation according to the overall performance requirements of the STATCOM Station. The transformer should be designed and rated to carry complete capacitive and inductive reactive loading as specified for STATCOM Station, as well as harmonic currents associated with the most onerous operating conditions of STATCOM Station, without loss of life.

The coupling transformer shall be designed in accordance with the most up-to-date experience in STATCOM application and shall incorporate the latest improvements of design currently employed in the industry. The Comprehensive design review of the Coupling Transformer of STATCOM Station shall be carried out by the TSP.

C.8.7.1 General Requirements

The coupling transformer shall be designed electrically and mechanically for operating conditions peculiar to STATCOM Station operation, which shall include, but not be limited to the following:

a) Electrical insulation problems resulting from the transformer being subjected to voltages of distorted sinusoidal wave shape because of saturation, harmonics, trapped charges in capacitors etc.

b) The cumulative effect of electro-dynamic forces produced during valve commutation or other short circuit conditions imposed by valve design limitation and valve group operation.

c) Harmonic currents due to STATCOM operation, with reference to additional stray losses resulting from these harmonic currents.

d) No generation of uncharacteristic harmonics by the transformers.

e) Stresses due to normal control operation and other onerous operations such as blocking and de-blocking.

f) Stress due to the fast response requirement of STATCOM for loading from 100% inductive to 100% capacitive and vice-versa.

g) Overvoltage stresses for which STATCOM shall be designed as per specification would apply to the transformer also.

h) All other stresses for which STATCOM Station shall be designed as per specification would apply to the transformer also.

i) The transformer and all its accessories like Bushings, CTs etc shall be designed to withstand without damage, the thermal and mechanical effects of any external short circuit to earth and of a short circuit across the terminals of any winding for a period of 3 seconds. The short circuit level of the 400 kV system to which the transformer shall be connected, will be as per the maximum short circuit level of the main substation. Short Circuit level of the Coupling Transformer shall be as per the Short Circuit level of the respective Substation. Short circuit level for HV bushing shall be 63 kA for 1 Sec.

j) The transformer shall be capable of being loaded in accordance with IEC 60076 or the overload conditions as specified whichever is the worst. There shall be no limitation imposed by bushings during its terminal fault.

k) The transformer shall be capable of withstanding the mechanical stresses caused by symmetrical or asymmetrical faults on any winding.

l) The transformer should be designed to carry a certain level of direct current consistent with the STATCOM design. To ensure minimum harmonics generation, the saturation flux density of the transformer should be higher than the maximum flux density reached over the full steady state (continuous operating) range; this margin shall be at least 10%. This maximum flux density (over the full steady-state range) is obtained at the highest secondary voltage during any reactive power generation, highest reference voltage, minimum slope, and minimum continuous frequency. The flux density at the highest secondary voltage shall lie in the linear portion of the BH curve of the core. Any harmonic generated by the transformer should be considered for the design of the STATCOM.

m) All protection class Current Transformers in the coupling transformer shall be of PX/PS type. Other details of these Current Transformers shall be as per protection/metering requirements and shall be decided during detailed engineering. However, the parameters of the Winding Temperature Indicator (WTI) of Current Transformer for each winding shall be as per the Coupling Transformer manufacturer.

n) Transformers shall be capable of operating under natural cooled conditions up to the specified load. The forced cooling equipment shall come into operation by pre-set contacts of winding temperature indicator and the transformer shall operate as a forced cooling unit initially as Oil Natural Air Forced (ONAF) up to a specified load and then as Oil Forced Air Forced (OFAF). Cooling shall be so designed that during total failure of power supply to cooling fans and oil pumps, the transformer shall be able to operate at full load

for at least ten (10) minutes without the calculated winding hot spot temperature exceeding 140 ° (degree) Celsius. Transformers fitted with two coolers, each capable of dissipating 50 percent of the heat due to losses at the continuous maximum rating, shall be capable of operating for 20 minutes in the event of failure of the oil circulating pump or blowers associated with one cooler without the calculated winding hot spot temperature exceeding 140 ° degree Celsius at continuous maximum rating.

o) The transformer shall be free from any electrostatic charging tendency (ECT) under all operating conditions when all oil circulation systems are in operation. In general, the oil flow speed shall not exceed 1.0 m/sec within winding in the oil flow system of the transformers. The manufacturer shall ensure that there is no electrostatic charging tendency in the design.

The Technical Parameters of the Transformer shall be as below

S. No.	Description	Unit	Technical Parameters
1.1	Rated Capacity		
	HV	MVA	To meet the performance requirement and ratings of STATCOM. The transformer shall be suitable for 100% reactive loading
	MV	MVA	
1.2	Voltage ratio (Line to Line)		400 / XX (*)
1.3	Single / Three Phase Design		Single phase
1.4	Applicable Standard		IEC 60076
1.5	Rated Frequency	Hz	50
1.6	Cooling and Percentage Rating at different coolings		ONAN/ONAF/(OFAF or ODAF): 60% / 80%/100% OR ONAN/ONAF1/ONAF2: 60% /80%/100% OR OFAF (with 5 x 25% unit cooler if required)
1.7	Impedance at 75 °C (in percentage)		
	HV–MV		To suit the design requirements.
1.8	Tolerance on Impedance (HV-MV)	%	As per IEC
1.9	Service		Outdoor
1.10	Duty		Continuous Reactive loading
1.11	Overload Capacity		IEC-60076-7

S. No.	Description	Unit	Technical Parameters
1.12	Temperature rise over 50 ^{o}C ambient Temp		
i)	Top oil measured by thermometer	^{0}C	50
ii)	Average winding measured by resistance Method	^{0}C	55
1.13	Windings		
i)	System Fault level		
	HV	kA	63
	MV	kA	To suit the design requirements.
ii)	Lightning Impulse withstand Voltage		
	HV	kVp	1425
	MV	kVp	*
	Neutral	kVp	170
iii)	Switching Impulse withstand Voltage		
	HV	kVp	1175
iv)	One Minute Power Frequency withstand Voltage		
	HV	kVrms	570
	MV	kVrms	*
	Neutral	kVrms	70
v)	Neutral Grounding		Solidly grounded
vi)	Insulation		
	HV		Graded
	MV		Uniform
vii)	Tan delta of winding	%	< 0.5
1.14	Vector Group (3 – ph) (unless specified differently elsewhere)		YNd*
1.15	Tap Changer		Not Applicable
1.16	Bushing		
i)	Rated voltage		
	HV	kV	420
	MV	kV	*
	Neutral	kV	36
ii)	Rated current (Min.)		
	HV	A	*
	MV	A	*
	Neutral	A	*

S. No.	Description	Unit	Technical Parameters
iii)	Lightning Impulse withstand Voltage		
	HV	kVp	1550
	MV	kVp	*
	Neutral	kVp	170
iv)	Switching Impulse withstand Voltage		
	HV	kVp	1175
v)	One Minute Power Frequency withstand		
	Voltage		
	HV	kVrms	695
	MV	kVrms	*
	Neutral	kVrms	77
vi)	Minimum total creepage distances		
	HV	mm/kV	31
	MV	mm/kV	31
	Neutral	mm/kV	31
vii)	Tan delta of bushings		
	HV	%	Refer Note 2
	MV	%	Refer Note 2
viii)	Max Partial discharge level at Um		
	HV	pC	10
	MV	pC	10
	Neutral		-
1.17	Max Partial discharge level at 1.58 * Ur /√3	pC	100
1.18	Max Noise level at rated voltage and at principal tap at no load and all cooling Active	dB	80
1.19	**Maximum Permissible Losses of**		
	Transformers		
i)	Max. No Load Loss at rated voltage and Frequency	kW	To suit the design requirements.
ii)	Max. Load Loss at maximum continuous current and at 75° C	kW	To suit the design requirements.
iii)	Max. Auxiliary Loss at rated voltage and Frequency	kW	To suit the design requirements.

Notes:

1. *No external or internal Transformers / Reactors are to be used to achieve the specified HV/MV impedances.*
2. *The criteria for Transformer losses shall be "Copper Loss (Load Loss) > Iron Loss (No Load Loss) > Cooler Loss (Auxiliary Loss)".*
3. *(*) marked parameters shall be decided based on STATCOM manufacturer's requirement.*

C.8.8 STATCOM Station MV Switchgear

The MV Switchgear shall be designed with the aim to achieve operation according to the overall performance requirements of the STATCOM Station.

C.8.8.1 MV Circuit Breaker

The MV Circuit Breaker shall comply with the relevant IEC standard and all other relevant Standards, and as specified in this specification. They shall satisfy the General Technical Requirements and shall be designed to operate in the environmental conditions specified in this specification.

The Circuit Breaker offered should be of SF6 type/Vacuum type only and of class C2, M2 as per IEC

i) The circuit breaker shall be complete with terminal connectors, operating mechanism, control cabinets, piping, interpole cable, cable accessories like glands, terminal blocks, marking ferrules, lugs, pressure gauges, density monitors (with graduated scale), galvanised support structure for CB and control cabinets, their foundation bolts and all other circuit breaker accessories required for carrying out all the functions the CB is required to perform.

ii) All necessary parts to provide a complete and operable circuit breaker installation such as main equipment, terminals, control parts, connectors and other devices whether specifically called for herein or not shall be provided.

iii) The support structure of the circuit breaker shall be hot dip galvanized. Exposed hardware items shall be hot dip galvanized or Electro-galvanized.

iv) MV Circuit Breaker shall be equipped with controlled switching with consequent optimization of switching behavior, when used in:

- Switching of Capacitor Bank
- Switching of shunt Reactor Bank

v) Reactor Switching Duty test shall be conducted on MV Circuit Breaker in line with latest edition of IEC 62271-110.

vi) Type Tested for Back-to-Back Capacitor Bank Switching as per latest edition of IEC 62271-100.

vii) Routine tests as per IEC: 62271-100 shall be performed on all circuit breakers.

viii) The medium voltage circuit breakers in any of the branches shall be designed to switch off metallic three phase short circuits only limited by the transformer impedance of the STATCOM System (Coupling transformer) with the initial short circuit current and DC component according to IEC 60909-0. Thereby the worst case time constant where the maximum short circuit peak and DC component occur shall be considered. The network shall be considered to deliver the maximum short circuit power of the substation.

C.8.8.2 MV Isolator and Earth Switch

The isolators and earth switches shall comply with the IEC and all other relevant Standards, and as specified in this specification. They shall satisfy the General Technical Requirements and shall be designed to operate in the environmental conditions specified in this specification.

i) The isolators and accessories shall conform in general to IEC-62271 series as per relevance (or IS:9921) except to the extent explicitly modified in specification.

ii) Earth switches shall be provided on isolators wherever called for.

iii) Switches shall be motor operated with local and remote operation features and local manual operation features. Remote operation of Earth Switch is not required.

iv) Disconnections and earth switches shall electrically and mechanically be interlocked. Castle Key interlocking facilities shall be provided to mechanically interlock the earth switch and Isolator to the doors of valve rooms.

C.8.8.3 Instrument Transformers for STATCOM Station

The instrument transformers shall comply with the relevant IEC Standards. They shall satisfy the general Technical Requirement specified in the specification and shall be designed to operate in the environmental conditions specified in this Specification. The instrument transformers provided for control, metering and protective relaying functions shall have voltage and current ratings, accuracy ratings and burden capabilities adequate to provide their designated functions within the overall accuracy requirement of the systems.

Voltage Transformers

Voltage transformers shall comply with the relevant IEC standards IEC 61869 (Part-1, Part-3 and Part-5).

Current Transformers

Current transformers shall comply with IEC 61869 (Part-1 and Part-2). Type tests and routine tests as per relevant IEC.

C.8.8.4 Surge Arrester

TSP shall install the surge arresters necessary for the protection of the equipment associated with the STATCOM Station in accordance with the requirements as per the insulation coordination study. The surge arresters shall give consistent protection to their associated

equipment against overvoltage produced by lightning or switching surges, internal or external station faults, and other system disturbances.
The surge arresters shall be rated such that they are able to discharge a specified maximum energy due to the application of lightning, switching surges, temporary over voltages and faults as determined by insulation coordination studies, without coming into the temperature region where thermal runaway could result upon subsequent application of maximum transient and steady state voltage conditions.

The arrester housing shall be porcelain/composite type. The end fittings shall be made of non-magnetic and corrosion proof material.

Internal components shall be designed to eliminate internal corona and also to ensure minimal capacitive coupling with any conducting layer of pollutant on the outside of the porcelain housing. Particular attention shall be given to the high discharge currents which some of the arresters may experience in service due to discharge of stored energy of the AC filter and reactive compensating equipment, tripping of STATCOM etc.

C.8.9 STATCOM Station Auxiliary Power Supply

The auxiliary supply of STATCOM Station shall conform with the system requirements relating to reliability, availability, and redundancy, performing continuously to help ensure that the complete STATCOM Station operates as per the requirements. STATCOM station Auxiliary supply including all necessary switchgear (viz. AC/DC, lighting boards etc.) shall be completely separate from the main 765/400/220 kV substation auxiliary supply, all loads of STATCOM station shall be fed from this supply. The auxiliary supply provides power to the controllers, cooling system, station supplies, and various other essential and non-essential loads. With the exception of the cooling system, all other essential loads are also connected to the DC system of the STATCOM Station which is also to be provided separately from the DC system of the main 765/400/220 kV substation.

The auxiliary supply system shall be able to provide a stable supply for the STATCOM Station during system faults such as single-phase faults, phase-to-phase faults, and three-phase faults and LVRT (Low Voltage Ride Through) to allow continuous operation of the STATCOM Station during these transient events.

Auxiliary Supply System of each STATCOM Station shall be fed from two independent sources as per CEA (Technical Standards for Connectivity to the Grid) Regulations, 2007. Additionally, there shall be one emergency incomer from the DG set.

Wherever the Voltage variation on the incomer is very high, a solid state AVR (Automatic Voltage Regulator) shall be provided to control the auxiliary supply voltage.

All MV incomers shall be provided with suitable CB, disconnector, instrument Transformer etc along with necessary protection system.

C.8.10 Fire Protection System for STATCOM Station:

Necessary fire protection for STATCOM units, Coupling Transformer, and Harmonic filter (if any) shall be required. The main features of these protections are as under.

Fire Detection and Alarm System:

Suitable fire detection system using smoke detectors and/or heat detectors shall be provided in STATCOM Station for all room and areas. These smoke fire detection systems shall be connected to a separate Fire annunciation system clearly identifying the zone.

Hydrant System:

The hydrant system shall be extended from fire -fighting system of the substation in the yard. Suitable number of hydrants shall be provided for protection of STATCOM Station equipment in the yard namely Coupling Transformer, and Harmonic Filter (if required) etc as applicable for the station. Further suitable number of hydrants shall also be provided for STATCOM Station building

HVW System:

HVW (High Velocity Water) Spray system shall be provided for coupling transformer. The tapping for HVW system shall be done from nearby transformer/Reactor or any other suitable point of the main substation fire-fighting line.
Fire protection system shall be provided in accordance with the Central Electricity Authority (Measures relating to Safety and Electric Supply) Regulations, 2023.

C.8.11 Air-conditioning and ventilation system for STATCOM station

The STATCOM Station shall be provided with Air conditioning system as per requirement.

1) AC System (Except Valve Hall):

Air condition system shall be provided for the following rooms in the STATCOM Building:

a. Control and Relay room
b. Battery room
c. Conference Room
d. Store cum workshop
e. Cooling system room
f. Lobby

Capacity and quantity of the AC units shall be decided based on heat load calculation and redundancy requirement.

2) Air-Conditioning System for Valve hall:

Air-Conditioning shall be provided for each Valve room for maintaining the following inside conditions round the year:

DBT - 35 ^{o}C (Maximum) Relative Humidity (RH) - 60% (Maximum)

The system shall be designed for an outside ambient temperature of 50 ^{o}C. Based on the above system design and parameters for valve room the AC system shall comprise “AHU and

Air-cooled DX Condensing units" with one Main and one Standby unit for each room. The system shall be designed for 24 Hours, 365 Days of the year operation to maintain the inside temperatures of the Valve Hall for proper operation of the critical equipment. The air-cooled condensing unit shall be designed for continuous duty.

C.9 Engineering studies

The TSP shall carry out studies as brought out in this section with a model of the STATCOM in PSSE and PSCAD and documentation of the same shall be preserved and to be submitted to CEA/CTU, as per their requirement. The objective of these studies is to verify the steady state requirement of reactive power under normal and contingent operating conditions for peak and light loads conditions in the network.

The studies shall have to be carried out for

- Peak Load
- Light Load
- Contingency Conditions

The load flow and dynamic file available with CTU shall be provided to the TSP in PSSE version 34 format. If data is not available typical data shall be assumed by TSP.

The studies should demonstrate that the STATCOM system meets all system and equipment specified performance criteria as per the specification. Engineering studies should include, but not be limited to, the studies described in subsequent subsections.

C.9.1 System dynamic performance studies

Dynamic performance studies should verify that the STATCOM system controls the system's dynamic performance during system disturbances. Dynamic performance studies include the following:

a. Studies verifying that the STATCOM provides adequate dynamic control to meet the system and STATCOM system performance criteria for the system conditions.

b. Study of response time and of the STATCOM system's behavior and contribution to the system's recovery from faults.

c. Studies to verify the operation of any supplementary controls designed to damp power oscillations following system disturbances.

d. Studies to evaluate the interaction of the STATCOM controls with the other nearby control systems, including high-voltage direct current (HVDC) controls, generator controls, and controls of other flexible AC transmission systems (FACTS) devices

In addition to the above, relevant studies shall include the cases stated as mentioned in Annexure-I

C.9.2 Harmonic performance

The studies should evaluate resultant maximum harmonic levels at the STATCOM system point of common coupling (PCC), and determine maximum stresses on all STATCOM system components. The study report should include the following:

a. Evaluation of specified system and operating conditions (refer to Clause 5) under all possible STATCOM operating conditions.

b. Evaluation within maximum ranges of STATCOM system component tolerances (worst performance values may not occur at detuning extremes).

c. Evaluation with maximum system voltage unbalance (refers to item 8 and item 9 in Table 3 of Clause 5).

d. Evaluation of the worst case resonance condition between STATCOM system and overall system.

e. Evaluation of possible resonant over voltages.

f. Transformer saturation induced harmonics for component rating calculation only.

g. Evaluation of impact considering single phase auto reclose deadtime.

C.9.3 Electromagnetic transients, control performance, and overvoltage studies

Transient overvoltage studies should be performed with the actual control modeled to verify that the STATCOM system equipment is adequately protected against over voltages and over currents (including excessive valve recovery voltages) from power system transients resulting from switching, fault clearing events, and credible STATCOM system maloperations. Evaluation shall include the following:

a. Study of start-up, including transformer energization, shutdown, switching coordination, and other local area network switching events

b. Study of STATCOM system protection and protection coordination

c. Faults on the high-voltage (HV) and MV bus (single line-to-ground, phase-to-phase, and three-phase)

d. Faults across the VSC, capacitors, and other equipment if used.

e. Control interaction

C.9.4 Insulation coordination study

Overall insulation coordination should be verified by considering the results of 8.4 (dynamic over voltages, and fault and switching transients), including the impacts of lightning surges on the STATCOM equipment. This study should determine and verify insulation levels, clearances, and arrester placement and ratings.

C.9.5 Other Studies

a) Grounding Study

b) Protection coordination

c) PLC/radio interference

d) Magnetic field strength

e) Other studies as applicable

C.9.6 Software simulation models

The TSP shall provide the latest following PSCAD and PSSE simulation model(s) and parameters to CEA/CTU/GRID-INDIA alongwith detailed documentation for the purpose of future simulation to adequately represent and model the proposed STATCOM system in the respective software:

a. **Stability model**. TSP should provide a detailed STATCOM system dynamics model for use in (PSCAD and PSSE) power flow and stability simulation software The model detail should be appropriate and complete for positive-sequence power system simulation and analysis that is typically performed with power flow and transient stability programs. All appropriate control features for such analysis will be modeled, and necessary documentation on the theory and use of model should be provided. Further, a generic model, benchmarked to detailed STATCOM stability model, shall also be furnished for distribution.

b. **Transient model**. TSP should provide a detailed STATCOM transients model for use in PSCAD. The model detail should be appropriate and complete for the transient response calculation of the STATCOM system. All appropriate control features for such analysis will be modeled, and necessary documentation on the theory and use of model should be provided. Further, a generic model, benchmarked to detailed STATCOM transient model, shall also be furnished for distribution.

PSS/E files may be used for developing RTDS files/ models. For simulation of STATCOM in PSS/E file (load flow and dynamic) and PSCAD (Transient) model for STATCOM is required for study. TSP will share STATCOM models with CEA, CTU and Grid-India along with detailed documentation for above study purposes and simulations. For PSS/E, both Generic and User-defined models shall be shared by the TSP with the CEA, CTU and Grid-India. Generic model **(PSS/E)** response shall be benchmarked with user-defined model **(PSS/E and PSCAD)** to the extent possible by the TSP. Generic models can be shared by the CEA, CTU and Grid-India with the concerned stakeholders/external party(ies) e. g. STUs etc. on need basis. For User Defined model, confidentiality shall be maintained by the CEA, CTU and Grid-India. For PSCAD, User Defined model shall be provided by the TSP for which confidentiality shall be maintained by the CEA, CTU and Grid-India.

Both UDM (PSCAD and PSS/E) and Generic model (PSSE) shall be provided by OEMs to CEA/CTU/GRID-INDIA without any NDA (Non-Disclosure Agreement)

C.9.7 Factory tests of controls

The integrated nature of the performance of the STATCOM in an electrical grid requires the following tests:

a. The TSP should perform factory simulator system tests for integrated control and protection system to ensure the proper operation of the same. The control system should be connected to a digital simulator with adequate representation of the electrical network for various conditions. The STATCOM system controller needs to be representative of control functions, including basic controllers but inclusive of supplementary controls, firing controls, and protective functions integrated into the controllers. TSP shall submit the FAT (Factory Acceptance Test) reports of STATCOM controls to CTU/RLDC.

b. The simulator should provide an accurate network representation including network harmonic behavior, as well as synchronous condensers, power stations, generators (with AVRs), and pump storage schemes, existing HVDC, SVCs and STATCOMs, future SVCs and STATCOMs, FSC (fixed series capacitors), and shunt reactors/capacitors/filters.

STATCOM system control function type tests on a simulator should include the following:

- Verification of each control function.
- Verification of control linearity.
- Verification of control redundancy.
- Verification of the monitoring system.
- Verification of the protection system with reference to integrated protective functions included in the Controllers and firing controllers.
- Verification of overall system performance for minor and major system disturbances.
- Verification of processor loading of all digital controllers.
- Verification of STATCOM system parallel operation with other controls in the system and control Stability.
- Verification of control equipment performance for auxiliary power supply voltage (AC and DC) and frequency variations (AC).
- Routine production tests of all control functions, and separately of all protection functions.

C.10.0 VISUAL MONITORING SYSTEM FOR WATCH AND WARD OF STATCOM STATION

Visual monitoring system (VMS) for effective watch and ward of STATCOM station premises covering the areas of entire switchyard, STATCOM building, Coupling Transformer, Cooling Towers and main gate, shall be provided. The TSP shall design, supply, erect, test and commission the complete system including cameras, Digital video recorder system, mounting arrangement for cameras, cables, LAN Switches, UPS and any other items/accessories required to complete the system.

Features of VMS system shall be as those specified for main substation. The number of cameras and their locations shall be decided in such a way that any location covered in the area can be scanned. The cameras shall be located in such a way to monitor at least:

a) Coupling Transformer, AC filter banks (if any).

b) STATCOM Valve Hall, Cooling System, Electrical and Mechanical Auxiliary area.

c) Entrance to STATCOM Station.

d) All other Major Equipment (such as CB, CT, VT, SA etc.)

The cameras can be mounted on structures, buildings or any other suitable mounting arrangement.

C.11.0 Spares, Special Tools and Tackles

Considering STATCOM as high technology proprietary equipment of the OEM, the TSP shall ensure necessary spares are procured to maintain the necessary reliability and availability of STATCOM station. Further all necessary special tools and tackles required for erection, testing, commissioning, and maintenance of equipment shall also be taken.

Annexure-I

Contingency Cases for STATCOM

A) N-1 Contingency

Contingency at 765 kV level

1. Three Phase Fault close to 765 kV bus of Krishnagiri PS followed by tripping of one circuit of Krishnagiri PS – Raichur New 765 kV D/C line (fault persisted for 100 ms)
2. Single Phase to Ground Fault close to 765 kV bus of Krishnagiri PS followed by single pole opening (100 ms) of the faulted phase and unsuccessful re-closure (dead time 1 second) followed by 3-pole opening (100 ms) of the faulted line i.e. tripping one circuit of Krishnagiri PS – Raichur New 765 kV D/C line
3. Three Phase Fault close to 765 kV bus of Krishnagiri PS followed by tripping of one circuit of Krishnagiri PS – Doma 765 kV D/C line (fault persisted for 100 ms)
4. Single Phase to Ground Fault close to 765 kV bus of Krishnagiri PS followed by single pole opening (100 ms) of the faulted phase and unsuccessful re-closure (dead time 1 second) followed by 3-pole opening (100 ms) of the faulted line i.e. tripping one circuit of Krishnagiri PS – Doma 765 kV D/C line
5. Three Phase Fault close to 765 kV bus of Krishnagiri PS followed by tripping of one circuit of Krishnagiri PS – Sagar 765 kV D/C line (fault persisted for 100 ms)
6. Single Phase to Ground Fault close to 765 kV bus of Krishnagiri PS followed by single pole opening (100 ms) of the faulted phase and unsuccessful re-closure (dead time 1 second) followed by 3-pole opening (100 ms) of the faulted line i.e. tripping one circuit of Krishnagiri PS – Sagar 765 kV D/C line
7. Three Phase Fault close to 765 kV bus of Ananthapuram-III PS followed by tripping of one circuit of Ananthapuram-III PS – Krishnagiri PS 765 kV D/C line (fault persisted for 100 ms)
8. Single Phase to Ground Fault close to 765 kV bus of Ananthapuram-III PS followed by single pole opening (100 ms) of the faulted phase and unsuccessful re-closure (dead time 1 second) followed by 3-pole opening (100 ms) of the faulted line i.e. tripping one circuit of Ananthapuram-III PS – Krishnagiri PS 765 kV D/C line
9. Three Phase Fault close to 765 kV bus of Ananthapuram-III PS followed by tripping of one circuit of Ananthapuram-III PS – Bidadi 765 kV D/C line (fault persisted for 100 ms)
10. Single Phase to Ground Fault close to 765 kV bus of Ananthapuram-III PS followed by single pole opening (100 ms) of the faulted phase and unsuccessful re-closure (dead time 1 second) followed by 3-pole opening (100 ms) of the faulted line i.e. tripping one circuit of Ananthapuram-III PS – Bidadi 765 kV D/C line
11. Three Phase Fault close to 765 kV bus of Raichur New S/s followed by tripping of one circuit of Raichur New – Solapur 765 kV 2xS/C lines (fault persisted for 100 ms)
12. Single Phase to Ground Fault close to 765 kV bus of Raichur New S/s followed by single pole opening (100 ms) of the faulted phase and unsuccessful re-closure (dead time 1 second) followed by 3-pole opening (100 ms) of the faulted line i.e. tripping one circuit of Raichur New – Solapur 765 kV 2xS/C lines
13. Three Phase Fault close to 765 kV bus of Raichur New S/s followed by tripping of one circuit of

Raichur New – Kurnool New 765 kV 2xS/c lines (fault persisted for 100 ms)

14. Single Phase to Ground Fault close to 765 kV bus of Raichur New S/s followed by single pole opening (100 ms) of the faulted phase and unsuccessful re-closure (dead time 1 second) followed by 3-pole opening (100 ms) of the faulted line i.e. tripping one circuit of Raichur New – Kurnool New 765 kV 2xS/c lines
15. Three Phase Fault close to 765 kV bus of Raichur New S/s followed by tripping of one circuit of Raichur New – Koppal-II PS 765 kV D/C line (fault persisted for 100 ms)
16. Single Phase to Ground Fault close to 765 kV bus of Raichur New followed by single pole opening (100 ms) of the faulted phase and unsuccessful re-closure (dead time 1 second) followed by 3-pole opening (100 ms) of the faulted line i.e. tripping one circuit of Raichur New – Koppal-II PS 765 kV D/C line
17. Three Phase Fault close to 765 kV bus of Doma S/s followed by tripping of one circuit of Doma – Bidar PS 765 kV D/C line (fault persisted for 100 ms)
18. Single Phase to Ground Fault close to 765 kV bus of Doma S/s followed by single pole opening (100 ms) of the faulted phase and unsuccessful re-closure (dead time 1 second) followed by 3-pole opening (100 ms) of the faulted line i.e. tripping one circuit of Doma – Bidar PS 765 kV D/C line
19. Three Phase Fault close to 765 kV bus of Doma S/s followed by tripping of one circuit of Doma – Kurnool-IV PS 765 kV D/C line (fault persisted for 100 ms)
20. Single Phase to Ground Fault close to 765 kV bus of Doma S/s followed by single pole opening (100 ms) of the faulted phase and unsuccessful re-closure (dead time 1 second) followed by 3-pole opening (100 ms) of the faulted line i.e. tripping one circuit of Doma – Kurnool-IV PS 765 kV D/C line

Contingency at 400 kV level

21. Three Phase Fault close to 400 kV bus of Krishnagiri PS followed by tripping of one 765/400 kV ICT at Krishnagiri PS (fault persisted for 100 ms)
22. Three Phase Fault close to 400 kV bus of Krishnagiri PS followed by tripping of one 400/220 kV ICT at Krishnagiri PS (fault persisted for 100 ms)
23. Three Phase Fault close to 400 kV bus of Krishnagiri PS followed by tripping of 1 GW generation at Krishnagiri PS (fault persisted for 100 ms) – ***Generation outage case***

B) N-1-1 Contingency

Contingency at 765 kV level

24. Case 1 & 2 (consider as separate cases) + Single Phase Fault close to 765 kV bus of Krishnagiri PS followed by single pole opening (100 ms) of the faulted phase (2nd ckt of Krishnagiri PS – Raichur New 765 kV D/C line) and successful re-closure (dead time 1 second)
25. Case 3 & 4 (consider as separate cases) + Single Phase Fault close to 765 kV bus of Krishnagiri PS followed by single pole opening (100 ms) of the faulted phase (2nd ckt of Krishnagiri PS – Doma 765 kV D/C line) and successful re-closure (dead time 1 second)
26. Case 5 & 6 (consider as separate cases) + Single Phase Fault close to 765 kV bus of Krishnagiri PS followed by single pole opening (100 ms) of the faulted phase (2nd ckt of Krishnagiri PS – Sagar 765 kV D/C line) and successful re-closure (dead time 1 second)

27. Case 7 & 8 (consider as separate cases) + Single Phase Fault close to 765 kV bus of Ananthapuram-III PS followed by single pole opening (100 ms) of the faulted phase (2nd ckt of Ananthapuram-III PS – Krishnagiri PS 765 kV D/C line) and successful re-closure (dead time 1 second)
28. Case 9 & 10 (consider as separate cases) + Single Phase Fault close to 765 kV bus of Ananthapuram-III PS followed by single pole opening (100 ms) of the faulted phase (2nd ckt of Ananthapuram-III PS – Bidadi 765 kV D/C line) and successful re-closure (dead time 1 second)
29. Case 11 & 12 (consider as separate cases) + Single Phase Fault close to 765 kV bus of Raichur New S/s followed by single pole opening (100 ms) of the faulted phase (2nd ckt of Raichur New – Kurnool New 765 kV 2xS/C lines) and successful re-closure (dead time 1 second)
30. Case 13 & 14 (consider as separate cases) + Single Phase Fault close to 765 kV bus of Raichur New S/s followed by single pole opening (100 ms) of the faulted phase (2nd ckt of Raichur New – Kurnool New 765 kV 2xS/C lines) and successful re-closure (dead time 1 second)
31. Case 15 & 16 (consider as separate cases) + Single Phase Fault close to 765 kV bus of Raichur New S/s followed by single pole opening (100 ms) of the faulted phase (2nd ckt of Raichur New – Koppal-II PS 765 kV D/C line) and successful re-closure (dead time 1 second)
32. Case 17 & 18 (consider as separate cases) + Single Phase Fault close to 765 kV bus of DomaS/s followed by single pole opening (100 ms) of the faulted phase (2nd ckt of Doma – Bidar PS 765 kV D/C line) and successful re-closure (dead time 1 second)
33. Case 19 & 20 (consider as separate cases) + Single Phase Fault close to 765 kV bus of Doma S/s followed by single pole opening (100 ms) of the faulted phase (2nd ckt of Doma – Kurnool-IV PS 765 kV D/C line) and successful re-closure (dead time 1 second)

SPECIFIC TECHNICAL REQUIREMENTS FOR COMMUNICATION

The communication requirement shall be in accordance to CEA (Technical Standards for Communication System in Power System Operations) Regulations, 2020, CEA (Technical Standards for Construction of Electrical Plants and Electric Lines) Regulations, 2022, CERC (Communication System for inter-State transmission of electricity) Regulations, 2017, CEA (Cyber Security in Power Sector) Guidelines, 2021, CEA Guidelines on Unified Philosophy for placement of PMUs in Indian Grid, March 2025 and all above documents as amended from time to time.

The communication services viz. SCADA, AGC (wherever applicable), VoIP, AMR and PMU have been identified as critical services and therefore shall be provisioned with 2+2 redundancy i.e. 2 channels for Main Control Centre and 2 channels for Backup Control Centre. In order to meet this requirement, suitable redundancy at port and card level need to be ensured by the TSP to avoid any single point of failure which may lead to interruption in real-time grid operation.

PMU to PDC communication (wherever required) shall be through 2 channels to the PDC (main) as there is no backup PDC at present.

Accordingly, all the hardware for communication services of station as stated above shall support dual redundancy for data transmission of station to respective main and backup RLDCs

The complete ISTS communication system commissioned by TSP under the RFP shall be the asset of ISTS and shall be available for usage of ISTS requirements as suggested by CTU from time to time.

TSP shall deploy Cyber Security System in compliance with CEA (Cyber Security in Power Sector) Guidelines, 2021 and CEA (Cyber Security in Power Sector) Regulation, from its date of publication/ notification and their amendments thereof.

In order to meet the requirement for grid management and operation of substations, Transmission Service Provider (TSP) shall provide the following:

C.1.0 FOTE Requirement for line bays at Krishnagiri PS

i) TSP shall supply install & commission FODP with minimum 528 Fiber capacity along with panel and approach Cable (48F each) with all associated hardware fittings from gantry tower to Control Room for all the incoming lines envisaged under the present scope.

ii) TSP shall supply, install & commission One or more STM-16 (FOTE) equipment alongwith panel/s supporting minimum eleven (11) directions with MSP (Multiplex Section Protection – 1+1). These directions shall exclude protected (1+1) local patching among equipment (if any). Communication Equipment shall be provided with necessary interfaces to meet the voice and data communication requirement among 6 no of 220 kV line bays, Krishnagiri, Sagar S/s, Raichur New S/s and Doma S/s. Necessary directions shall be provided in the FOTE for 220 kV Line bays, however required optical interfaces shall be provided by respective entity at the time of connectivity. The suitable DC Power Supply and backup to be provided for communication equipment.

iii) FOTE & FODP Eq can be accommodated in same panel to optimize space.

iv) The maintenance of all the communication equipment and software thereof including FOTE, FODP, PMU, approach cable, DCPS alongwith Battery Bank & Cyber Security System shall be the responsibility of TSP.

C.2.0 FOTE Requirement for line bays at Doma S/s

(i) TSP shall supply install & commission FODP with minimum 144 Fiber capacity along with panel and approach Cable (48F each) with all associated hardware fittings from gantry tower to Control Room for all the incoming lines envisaged under the present scope.

(ii) TSP shall supply, install & commission One or more STM-16 (FOTE) equipment alongwith panel/s supporting minimum three (3) directions with MSP (Multiplex Section Protection – 1+1). Communication Equipment shall be provided with necessary interfaces to meet the voice and data communication requirement between Krishnagiri PS, Doma, and local patching with control room FOTE. The suitable DC Power Supply and backup to be provided for communication equipment.

(iii) FOTE/FODP panel shall be installed in the new Bay Kiosk/Switchyard Panel Room (SPR)/Relay panel Room. The FOTE under present scope shall be integrated by TSP with the existing FOTE at control room of Doma S/s which shall be communicating with respective control center. TSP to provide necessary FODP sub rack / Splice trays/ Patch cords etc. and optical interfaces/equipment in the existing FOTE/FODP panels in control room for integration with the existing FOTE for onwards data transmission.

In case spare optical direction is not available in the existing FOTE at the control room, the TSP shall coordinate with station owner to reconfigure the directions in existing FOTE at control room. Alternatively, The TSP may integrate the FOTE under the present scope with existing FOTE in the nearby Kiosk connected to the control room FOTE (if available with spare direction). For this purpose, TSP shall provide necessary FODP sub rack / Splice trays/ Patch cords etc. and suitable optical interfaces/ equipment in the existing FOTE/FODP panels in another Kiosk (SPR).

(iv) FOTE & FODP Eq can be accommodated in same panel to optimize space.

(v) The maintenance of all the communication equipment and software thereof including FOTE, FODP, PMU, approach cable, DCPS alongwith Battery Bank & Cyber Security System shall be the responsibility of TSP.

C.3.0 FOTE Requirement for line bays at Raichur New S/s

(i) TSP shall supply install & commission FODP with minimum 144 Fiber capacity along with panel and approach Cable (48F each) with all associated hardware fittings from gantry tower to Control Room for all the incoming lines envisaged under the present scope.

(ii) TSP shall supply, install & commission One or more STM-16 (FOTE) equipment alongwith panel/s supporting minimum three (3) directions with MSP (Multiplex Section Protection – 1+1). Communication Equipment shall be provided with necessary interfaces to meet the voice and data communication requirement between Krishnagiri PS and Raichur New S/s and local patching with control room FOTE. The suitable DC Power Supply and backup to be provided for communication equipment.

(iii) FOTE/FODP panel shall be installed in the new Bay Kiosk/Switchyard Panel Room (SPR)/Relay panel Room. The FOTE under present scope shall be integrated by TSP with the existing FOTE at control room of Raichur New S/s which shall be communicating with respective control center. TSP to provide necessary FODP sub rack / Splice trays/ Patch cords etc. and optical interfaces/equipment in the existing FOTE/FODP panels in control room for integration with the existing FOTE for onwards data transmission.

In case spare optical direction is not available in the existing FOTE at the control room, the TSP shall coordinate with station owner to reconfigure the directions in existing FOTE at control room. Alternatively, The TSP may integrate the FOTE under the present scope with existing FOTE in the nearby Kiosk connected to the control room FOTE (if available with spare direction). For this purpose, TSP shall provide necessary FODP sub rack / Splice trays/ Patch cords etc. and suitable optical interfaces/ equipment in the existing FOTE/FODP panels in another Kiosk (SPR).

(iv) FOTE & FODP Eq can be accommodated in same panel to optimize space.

(v) The maintenance of all the communication equipment and software thereof including FOTE, FODP, PMU, approach cable, DCPS alongwith Battery Bank & Cyber Security System shall be the responsibility of TSP

C.4.0 FOTE Requirement for line bays at Sagar S/s

(i) TSP shall supply install & commission FODP with minimum 192 Fiber capacity along with panel and approach Cable (48F each) with all associated hardware fittings from gantry tower to Control Room for all the incoming lines envisaged under the present scope.

(ii) TSP shall supply, install & commission One or more STM-16 (FOTE) equipment alongwith panel/s supporting minimum four (4) directions with MSP (Multiplex Section Protection – 1+1). Communication Equipment shall be provided with necessary interfaces to meet the voice and data communication requirement among Sagar S/s, Krishnagiri PS and

Nagarjunasagar S/s. The suitable DC Power Supply and backup to be provided for communication equipment.

(iii) FOTE & FODP Eq can be accommodated in same panel to optimize space.

(iv) The maintenance of all the communication equipment and software thereof including FOTE, FODP, PMU, approach cable, DCPS alongwith Battery Bank & Cyber Security System shall be the responsibility of TSP

C.5.0 FOTE Requirement for line bays at Nagarjunasagar S/s

(i) TSP shall supply install & commission FODP with minimum 144 Fiber capacity along with panel and approach Cable (48F each) with all associated hardware fittings from gantry tower to Control Room for all the incoming lines envisaged under the present scope.

(ii) TSP shall supply, install & commission One or more STM-16 (FOTE) equipment alongwith panel/s supporting minimum three (3) directions with MSP (Multiplex Section Protection – 1+1). Communication Equipment shall be provided with necessary interfaces to meet the voice and data communication requirement between Nagarjunasagar S/s and Sagar S/s and local patching with control room FOTE. The suitable DC Power Supply and backup to be provided for communication equipment.

(iii) FOTE/FODP panel shall be installed in the new Bay Kiosk/Switchyard Panel Room (SPR)/Relay panel Room. The FOTE under present scope shall be integrated by TSP with the existing FOTE at control room of Nagarjunasagar S/s which shall be communicating with respective control center. TSP to provide necessary FODP sub rack / Splice trays/ Patch cords etc. and optical interfaces/equipment in the existing FOTE/FODP panels in control room for integration with the existing FOTE for onwards data transmission.

In case spare optical direction is not available in the existing FOTE at the control room, the TSP shall coordinate with station owner to reconfigure the directions in existing FOTE at control room. Alternatively, The TSP may integrate the FOTE under the present scope with existing FOTE in the nearby Kiosk connected to the control room FOTE (if available with spare direction). For this purpose, TSP shall provide necessary FODP sub rack / Splice trays/ Patch cords etc. and suitable optical interfaces/ equipment in the existing FOTE/FODP panels in another Kiosk (SPR).

(iv) FOTE & FODP Eq can be accommodated in same panel to optimize space.

(v) The maintenance of all the communication equipment and software thereof including FOTE, FODP, PMU, approach cable, DCPS alongwith Battery Bank & Cyber Security System shall be the responsibility of TSP

C.6.0 Krishnagiri – Doma 765 kV D/C line

(I) On Krishnagiri – Doma 765 kV D/C line, TSP shall supply, install & commission One (1) no. OPGW cable containing 48 Fibres (48F) on one E/W peak and conventional earth wire on other E/W peak.

(II) The TSP shall install this OPGW from gantry of Krishnagiri PS up to the gantry of Doma S/s with all associated hardware including Vibration Dampers, mid-way & gantry Joint Boxes (called **OPGW Hardware** hereafter) and finally terminate in Joint Boxes at end Substations. The transmission line length is **240 kms (approx.),** where repeater may be required to meet the link budget requirement of Krishnagiri – Doma link. The same shall be provided by TSP.

(III) TSP shall finalize the location of repeater station depending upon the actual site conditions. Further TSP shall comply to the requirements mentioned as per **Appendix-F.1**

(IV) Maintenance of OPGW Cable & OPGW Hardware shall be responsibility of TSP.

C.7.0 Krishnagiri – Raichur New 765 kV D/C line

(i) On Krishnagiri – Raichur New 765 kV D/C line, TSP shall supply, install & commission One (1) no. OPGW cable containing 48 Fibres (48F) on one E/W peak and conventional earth wire on other E/W peak.

(ii) The TSP shall install this OPGW from gantry of Krishnagiri PS up to the gantry of Raichur New S/s with all associated hardware including Vibration Dampers, mid-way & gantry Joint Boxes (called **OPGW Hardware** hereafter) and finally terminate in Joint Boxes at end Substations. The transmission line length is **150 kms (approx.),** where repeater may not be required to meet the link budget requirement of Krishnagiri – Raichur New link.

(iii) Maintenance of OPGW Cable & OPGW Hardware shall be responsibility of TSP.

C.8.0 Krishnagiri – Sagar765 kV D/C line

(i) On Krishnagiri – Sagar 765 kV D/C line, TSP shall supply, install & commission One (1) no. OPGW cable containing 48 Fibres (48F) on one E/W peak and conventional earth wire on other E/W peak.

(ii) The TSP shall install this OPGW from gantry of Krishnagiri PS up to the gantry of Sagar S/s with all associated hardware including Vibration Dampers, mid-way & gantry Joint Boxes (called **OPGW Hardware** hereafter) and finally terminate in Joint Boxes at end Substations. The transmission line length is **240 kms (approx.),** where repeater may be required to meet the link budget requirement of Krishnagiri – Sagar link. The same shall be provided by TSP.

(iii) TSP shall finalize the location of repeater station depending upon the actual site conditions. Further TSP shall comply to the requirements mentioned as per **Appendix-F.1**

(iv) Maintenance of OPGW Cable & OPGW Hardware shall be responsibility of TSP.

C.9.0 Sagar – Nagarjunasagar 400 kV D/C line

(i) On Sagar – Nagarjunasagar 400 kV D/C line, TSP shall supply, install & commission One (1) no. OPGW cable containing 48 Fibres (48F) on one E/W peak and conventional earth wire on other E/W peak.

(ii) The TSP shall install this OPGW from gantry of Sagar S/s up to the gantry of Nagarjunasagar S/s with all associated hardware including Vibration Dampers, mid-way & gantry Joint Boxes (called **OPGW Hardware** hereafter) and finally terminate in Joint Boxes at end Substations. The transmission line length is **25 kms (approx.),** where repeater may not be required to meet the link budget requirement of Sagar – Nagarjunasagar link.

(iii) Maintenance of OPGW Cable & OPGW Hardware shall be responsibility of TSP.

C.10.0 Specific Requirement for Phasor Measurement Units (PMUs)

TSP shall supply, install and commission required No. of Phasor Measurement Units (PMUs) as per the "Guidelines on Unified Philosophy for placement of PMUs in Indian Grid" issued vide CEA letter No. CEA-PS-14-12/9/2024-PSETD Division dated 19.03.2025 for the scope of this RFP. The PMUs shall be provided with LAN switch and shall connect with LAN switch of control room of respective substations/ generating stations with Fibre Optic cable. The PMUs shall be connected with the FOTE at Substation/ generating stations for onwards data transmission to the PDC (Phasor Data Concentrator) located at respective RLDC. Configuration work in existing PDC at RLDC for new PMU integration shall be done by respective RLDC, however all the necessary support in this regard shall be ensured by TSP. The maintenance of all the PMUs and associated equipment shall be the responsibility of TSP.

Note: Existing Station owner/s to provide necessary support to integrate different equipment and applications of new extended bays with the existing substation e.g. Communication (through FOTE), Voice etc. for smooth operation and monitoring of new added grid elements.

C.11.0 Specific Requirement for UNMS Integration of FOTE

<u>Communication system integration in UNMS/CSMS</u>

TSP is to ensure integration of communication system into UNMS/CSMS as per following:

"The new communication equipment/ system under the present scope shall be compatible for integration with existing regional level NMS system/ Centralized Supervision & Monitoring System (CSMS) i.e. Regional UNMS. The local configuration of the new communication equipment/ system at the station end shall be the responsibility of TSP as per followings. The

configuration work in the existing centralized NMS/ UNMS at Control center end, for integration of new Communication equipment/ system shall be done by Regional ULDC Team/ NMT, however all the necessary support in this regard shall be ensured by TSP.

Requirement for integration of Communication Equipment/ system with Regional UNMS:

1. TSP shall ensure that NMS/EMS/NE supplied by them is NBI compliant and all FCAPS functionality is supported in the NBI such as NE Inventory, Hardware Inventory–Shelf/Slot/Card/SFP/Port, Topology, Protections, Alarms, Performance-real time & periodic, Performance KPI parameters (E-1, STM, Ethernet), Remote Configuration, Cross Connects, Trails & Circuits, Services Provisioning (NE), E-1, STM, Ethernet, TX & RX Trace, loop back and details are published in the NBI guide for the configuration parameters.

2. TSP shall be obliged to provide/share all necessary documentations such as NBI Guide/MIB/IDL/WSDL/API files etc. for onward integration of their NMS/EMS/NE with regional UNMS.

3. The following support shall be provided by TSP for integration of their supplied equipment with regional UNMS:
   - Enabling & activating NBI license in their EMS/NMS and providing NBI login access along with User credentials
   - Assist in verifying NBI Connectivity with UNMS vendor for the successful communication and retrieval of data.
   - Assist in troubleshooting (if required) for NBI connectivity along with UNMS vendor for the communication and retrieval of data.

4. For standalone NE which is not integrated with any EMS/NMS, TSP shall provide modality of complete FCAPS data acquisition as above through industry standard programmatic methods and provide the CLI command manual."

Appendix-F.1

Repeater Requirements

- If the repeater location is finalized in the Control Room of a nearby substation, TSP shall provide OPGW to accommodate all the fibers in main transmission line on a single Earthwire peak with OPGW Hardware & mid-way Joint Boxes etc. of the line crossing the main line and required approach Cable to accommodate all the OPGW fibers with all associated hardware fittings, to establish connectivity between crossing point of main transmission line up to the repeater equipment in substation control room.

  TSP shall co-ordinate for Space & DC power supply sharing for repeater equipment.
  TSP shall provide FODP, FOTE (with STM-16 capacity) with suitable interfaces required for link budget of respective link.

  OR

- If the repeater location is finalized in the nearby substation premises, the TSP shall identify the Space for repeater shelter in consultation with station owner. Further TSP shall provide OPGW to accommodate all the fibers in main transmission line on a single Earthwire peak with OPGW Hardware & mid-way Joint Boxes etc. of the line crossing the main line and required approach Cable/UGFO to accommodate all the OPGW fibers with all associated hardware fittings, to establish connectivity between crossing point of main transmission line up to the substation where the repeater shelter is to be housed.

  TSP shall provide repeater shelter along with FODP, FOTE (with STM-16 capacity) with suitable interfaces require for link budget of respective link, reliable power supply provisioning for AC and DC supply, battery bank, Air Conditioner and other associated systems.

  OR

- If the repeater location is finalized on land near the transmission tower. TSP shall make the provisions for Land at nearby tower for repeater shelter. Further TSP shall provide required approach Cable to accommodate all the OPGW fibers with all associated hardware fittings to establish connectivity up to the location of repeater shelter.

  TSP shall provide repeater shelter along with FODP, FOTE (with STM-16 capacity) with suitable interfaces require for link budget of respective link, reliable power supply provisioning for AC and DC supply, battery bank, Air Conditioner and other associated systems.

Maintenance of OPGW Cable and **OPGW Hardware**, repeater equipment & items associated with repeater shelter shall be the responsibility of TSP.

Transmission System for integration of Krishnagiri REZ Phase-I

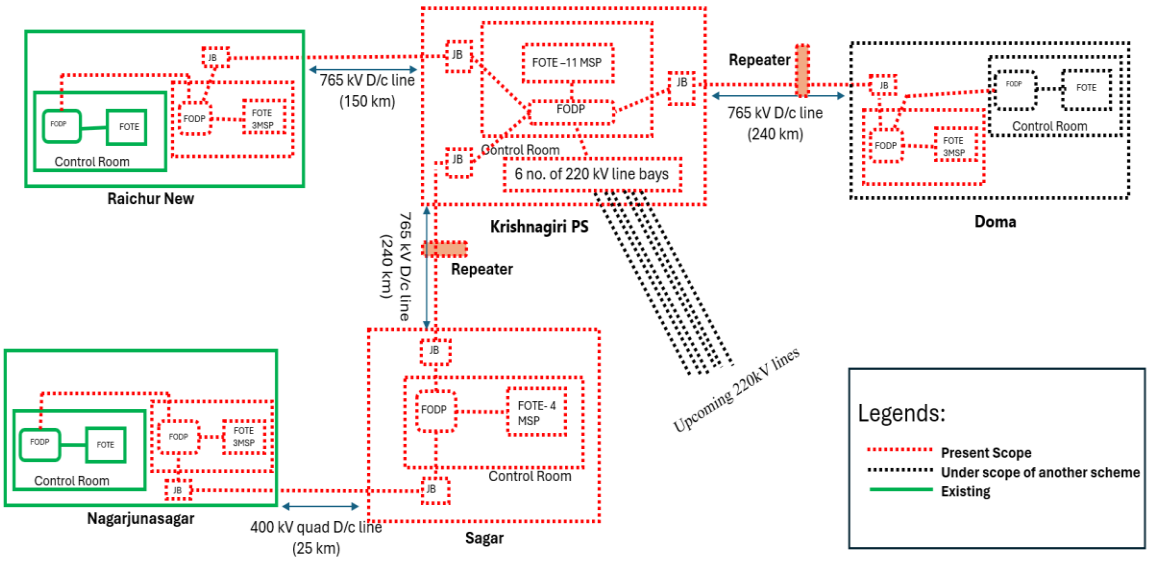

Figure F.1

C.12.0 PLCC and PABX:

Power line carrier communication (PLCC) equipment complete for speech, tele-protection commands and data channels shall be provided on each transmission line. The PLCC equipment shall in brief include the following: -

- Coupling device, Coupling filters line traps, carrier terminals, protection couplers, HF cables, PABX (if applicable) and maintenance and testing instruments.
- At new substation, a telephone exchange (PABX) of 24 lines shall be provided at as means of effective communication among various buildings of the substation, remote end substations and with control centres (RLDC/ SLDC) etc.
- Coupling devices shall be suitable for phase-to-phase coupling for 400 kV Transmission lines. The pass band of coupling devices shall have sufficient margin for adding communication channel in future if required. Necessary protection devices for safety of personnel and low voltage part against power frequency voltages and transient over voltage shall also be provided.
- The line traps shall be broad band tuned suitable for blocking the complete range of carrier frequencies. Line Trap shall have necessary protective devices such as lightning arresters for the protection of tuning device. Decoupling network consisting of line traps and coupling capacitors may also be required at certain substation in case of extreme frequency congestion.
- The carrier terminals shall be of single side-band (SSB) amplitude modulation (AM) type and shall have 4 kHz band width. PLCC Carrier terminals and Protection couplers shall be considered for both ends of the line.
- **PLCC equipment for all the transmission lines covered under the scheme shall be provided by TSP. PLCC to be provided for following lines under present scope:**

S. No.	Line name	PLCC configuration
1.	Krishnagiri – Doma 765 kV D/C line	1 set Analog PLCC + 1 set Digital Protection Coupler for each circuit at both ends.
2.	Krishnagiri – Raichur New 765 kV D/C line	1 set Analog PLCC + 1 set Digital Protection Coupler for each circuit at both ends.
3.	Krishnagiri – Sagar 765 kV D/C line	1 set Analog PLCC + 1 set Digital Protection Coupler for each circuit at both ends.
4.	Sagar-Nagarjunasagar 400 kV D/C line	1 set Analog PLCC + 1 set Digital Protection Coupler for each circuit at both ends.

- Further, CVT and Wave trap for all 765 kV, 400 kV and 220 kV line bays under present scope shall be provided by TSP.
- All other associated equipment like cabling, coupling device and HF cable shall also be provided by the TSP.

- Two (2) sets of 48 V battery banks for PLCC and communication equipment shall be provided at each new Substation with at least 10-hour battery backup and extended backup, if required.

Frequently Asked Queries:

1.0 Transmission Line:

1.1 Please clarify that whether shutdowns for crossing of existing transmission lines of POWERGRID/STUs/ Power Evacuation Lines from Generation Plants/ Any other Transmission Licensee will be given to TSP on chargeable basis or free of cost.

Reply: Shutdowns for crossing of existing transmission lines of POWERGRID/ STUs/ Power Evacuation Lines from Generation Plants/ Any other Transmission Licensee will be given to TSP by the concerned owner of the lines as per their own terms and conditions. As far as shutdown of ISTS lines are concerned the same can be availed by approaching respective Regional Power Committee.

1.2 We understand that the suggested swing angle criteria are applicable for Suspension Insulator in Suspension Tower. Further, you are requested to provide similar swing angle and clearance criteria for Pilot Insulator with Jumper and Jumper.

Reply: It is clarified that the swing angle criteria (as mentioned in RFP) for transmission lines is applicable for Suspension Insulator in Suspension Tower. Further, as per Clause 3.0 of Specific Technical Requirements for transmission lines, Transmission service Provider (TSP) shall adopt any additional loading/design criteria for ensuring reliability of the line, if so desired and /or deemed necessary.

1.3 We request you to kindly allow that use of diamond configuration at Power line crossings and the existing owner of the lines may be directed to allow the same for the successful bidders.

Reply: Power line crossing including Diamond configuration is the responsibility of the TSP. TSP shall formally submit the profile of the crossing section to the owner of the existing line suggesting proposed crossing alternatives. The crossing will have to be carried out as per approval of owner of the existing line.

1.4 It is requested you to kindly provide present status of Forest Clearances if any transmission line corridor area falling in wildlife forest / reserve forest/ mangroves

Reply: Based on the preliminary route survey, the process of initiation of forest clearance for the forest stretches, if any, enroute the proposed line alignment will be initiated by way of writing letters to the concerned authority (ies). However, it may be noted that it will be the responsibility of TSP for obtaining forest clearance for the forest stretches as provided in the survey report and also for any forest area encountered during detailed survey.

1.5 For transmission line, no special requirement is specified for type of Insulator and creepage in RFP document. Hence it is understood that bidder can decide the type of insulator along with creepage requirement based on general CEA regulations and relevant standards. Kindly confirm.

Reply: The minimum specific creepage distances shall be decided for the site pollution severity in the area of installation keeping in mind further increase in pollution during life of the line. It shall be as per CEA regulations and relevant standards. However, the tower shall be designed considering the porcelain insulators with creepage factor of 31 mm/kV irrespective of type of insulator used.

2.0 Substation

2.1 We understand that space for storage of O&M spare shall be provided by the existing owner within the station boundary without any cost. Kindly confirm.
Reply: Space for storage of O&M spares shall be arranged by TSP on its own.

2.2 We presume that the O&M for the end Termination bays will be in the scope of the TSP and TSP shall not be liable for any payment towards O&M to the existing owner of the substation. Kindly confirm.

Reply: Operation and maintenance of the bays is solely the responsibility of the TSP. Further, TSP shall follow CEA's "Operation and Maintenance (O&M) guidelines and Standard Format for Memorandum of Understanding between New TSP and Existing TSP" issued by CEA vide its letter No. I/28514/2023 dated 22.06.2023.

2.3 With reference to subject scheme of existing sub-station, we assumed following scope of work:

(a) We assumed internal road is available and need not to be consider in the present scope of work.
(b) Drainage is available and need not to consider in the present scope of work.
(c) Cable trench extension adjacent to Main cable trench only under present scope of work.
(d) Levelled area being provided by developer for bay extension.

Reply: Regarding requirement of internal road, drainage, cable trench, leveling of the bay extension area, bidder is advised to visit site and acquaint themselves with the provisions/facilities available at substation.

2.4 Kindly provide the soil investigation report of soil parameters of existing substation.

Reply: Bidder is advised to visit the substation site and ascertain the requisite parameters.

2.5 Kindly confirm, energy accounting of aux. power consumption. Whether it will be on chargeable basis or part of transmission loss.

Reply: It will be on a chargeable basis.

2.6 We understand that VMS requirement is for unmanned stations only. For Manned stations VMS is not compulsory.

Reply: VMS shall be provided in line with requirements of RfP document.

2.7 It is understood that Construction water and power shall be provided free of cost to TSP by the respective substation owner for construction of new bays.

Reply: Arrangement of construction power and water is in the scope of TSP.

2.8 It is understood that the existing fire hydrant system shall be extended by the TSP for bay extension.

Reply: Existing fire hydrant system shall be extended from existing system (if required)

2.9 Please clarify the Status of land acquisition for new Substations. Whether the lands have been acquired by BPC and will be transferred to TSP.

Reply: The acquisition of land for new substation is in the scope of TSP.

2.10 We understood that no any dedicated metering CT and CVT required for Line/feeders. Further, we understood that requisite Energy meters for various 765 kV, 400 kV and 220 kV Feeders shall be provided and installed by CTU free of cost to TSP.

Reply: Dedicated metering CT and CVT are not required for line/feeders. Metering core of existing CT/CVT can be used provided accuracy class matches with metering requirement. Requisite Special Energy Meters shall be provided and installed by CTU at the cost of TSP in C&P panel subject to space availability, else, in separate metering panel (to be provided by TSP at its cost).

2.11 A draft copy of the Connection Agreement may be furnished. A draft copy of the Connection Agreement may be furnished.

Reply: Web page link https://www.ctuil.in/formats_gna_transition

2.12 Please clarify whether the spare 765 kV single phase Reactor unit for Bus reactor shall be provided with 1ph 765 kV CB.

Reply: As per RfP, the spare 1-Ph reactor unit shall be utilized for all the bus and switchable line reactor banks (including for future reactor banks). Hence, 1ph 765 kV
CB shall also be provided with spare 1-Ph reactor for utilizing with bus reactor as well as switchable line reactor.

2.13 It is understood that existing busbar protection has provision for future bays and also PUs are available for future bays. BPC to confirm availability of CU and PU for bays under present scope of work at existing substations. BPC may kindly confirm availability of communication ports for integrating new PUs with the existing CUs at existing substations.

Reply: Bus Bar Protection with Central Unit (CU) is required for the new bus section as specified in RfP. Peripheral Units (PUs) shall be provided by the respective bay owner. Further, augmentation/replacement of existing CU, if required, to meet the system requirement shall also be provided for proper functioning of bus bar protection.

2.14 For SCADA, it is understood that necessary process I/O shall be available for future bays and accordingly license for same. BPC to confirm.

Reply: Necessary process I/O along with license shall be in the scope of the successful bidder.

2.15 No separate FF system is envisaged under the present scope of work for existing substation. BPC to confirm.

Reply: Existing fire-fighting systems shall be extended to meet the additional requirements under present scope.

2.16 PLCC for 220 kV Lines are not under the scope of TSP. BPC to Confirm.It is requested to provide Type of Coupling for 220 kV Transmission Lines under present scope.

Reply: PLCC for 220 kV line is in the scope of developer of the line.
Inter circuit coupling for 220 kV D/C and phase to phase coupling for 220 kV S/C shall be applicable for PLCC.

2.17 BPC is requested to confirm the availability of space in the existing control rooms at existing substation for execution of extension work under current project.

Reply: Switchyard Panel Rooms are generally required for AIS type substation and relay room are required for GIS type substation. Further, if needed, the control room shall be augmented as per requirement.

3.0 <u>Communication</u>

3.1 What are the usage of OPGW, FOTE, PMU etc. under communication requirement of RFP?

Reply: User shall be responsible for providing compatible equipment along with appropriate interface for uninterrupted communication with the concerned control center and shall be responsible for successful integration with the communication system provided by CTU.
Communication systems e.g. OPGW, FOTE etc. and PMU are required for grid operation through RLDC/SLDC, speech communication, tele-protection and tele-metering.

3.2 Is space for installation of communication panels are provided to TSP in existing Substations incase new bays are in the scope of TSP?

Reply: The space related issues are deliberated in the RfP itself. TSP to install FOTE/FODP panels in the new Bay Kiosk (Switchyard Panel Room (SPR)) / Bay Kisok/ Relay Panel Room

(in case of GIS S/s). Further, TSP to connect and integrate the proposed FOTE with the existing FOTE in the control room to complete the communication path upto RLDC.

In Case 132 kV Substation TSP shall accommodate the said panels either by extension of existing control room or other arrangements.

3.3 How is the OPGW laying done in case of LILO lines?

Reply: In case LILO lines are on same towers (e.g. both Line in and Line Out portion are on same towers, generally done LILO of S/C lines). Then 2x48F OPGW shall be required to install by TSP on both earthwire peak on 400 kV and 765 kV lines where two E/W peaks are available. On 220 kV and 132 kV lines where only one E/W peak is available TSP to install one No. 96F OPGW.
Incase LILO lines are on different towers (e.g. both Line In and Line Out portion are on different towers, generally done LILO of D/C lines). Then 1x48F OPGW shall be required to install by TSP on one earthwire peak and conventional earthwire on second earthwire peak, on both Line In and Line Out portion towers of 400 kV and 765 kV lines. On 220 kV and 132 kV lines where only one E/W peak is available TSP to install one No. 48F OPGW in place of conventional earthwire.

3.4 How is the OPGW laying done in case Multi circuit Towers?

Reply: In case two different lines are using common multi circuit portion for some distance (originating from different stations, may be terminating on same or on different stations). Two No. 48F OPGW to be installed on both E/W peaks for common M/C portion of 765 kV and 400 kV lines.

Incase 220/132 kV lines using multi circuit portion where single E/W peak is available one No. 96F may be installed for common multi circuit portion.

3.5 How PMUs are integrated for new bays at existing Substations?

Reply: PMU data of new bays to be provided in the ethernet port of switch at control room and thereafter to be connected with existing FOTE of existing substation to send data to PDC of RLDC by TSP. These PMUs shall be provided with GPS/NavIC clock and LAN switch and shall connect with LAN switch of control room of respective substations with Fiber Optic cable. In this regard, the “Guidelines on Unified Philosophy for placement of PMUs in Indian Grid” issued vide letter No. CEA-PS-14-12/9/2024-PSETD Division dated 19.03.2025 shall be followed.

3.6 Is Spare direction available in existing FOTE for integration with new bay kiosk FOTE

Reply: The FOTE under present scope shall be integrated by TSP with the existing FOTE at control room of substation for onwards data transmission.

In case spare optical direction is not available in the existing FOTE at the control room, the TSP shall coordinate with station owner to reconfigure the directions in existing FOTE at control room.

3.7 What is the distance from LILO point to proposed substation for feasibility of repeater station?

Reply: Tentative Location of LILO point shall be as per survey report of BPC however, exact location to be ascertained after detailed survey by TSP.

3.8 What is the make and model of existing OPGW in case LILO of main line at new substation?

Reply: All OPGW(alongwith optical fibers) meet Central Electricity Authority (Technical Standards for Communication System in Power System Operations) Regulations, 2020 and bidder shall install OPGW accordingly.

3.9 In case of LILO of existing line at new substation who shall provide PMUs at existing substation bays?

Reply: TSP shall provide the PMUs for the scope under the RfP in compliance of the "Guideline on Unified Philosophy for placement of PMUs in Indian Grid" issued vide letter No. CEA-PS-14-12/9/2024-PSETD Division dated 19.03.2025.

4.0 <u>Planning :</u>

4.1 Whether the Project/ Elements are eligible for early commissioning incentive as per MoP, GoI order dated 15.07.2015.?

Reply: Commissioning is to be done as per the timeline mentioned in RfP. However, early commissioning shall be treated as per applicable CERC Regulations/orders.

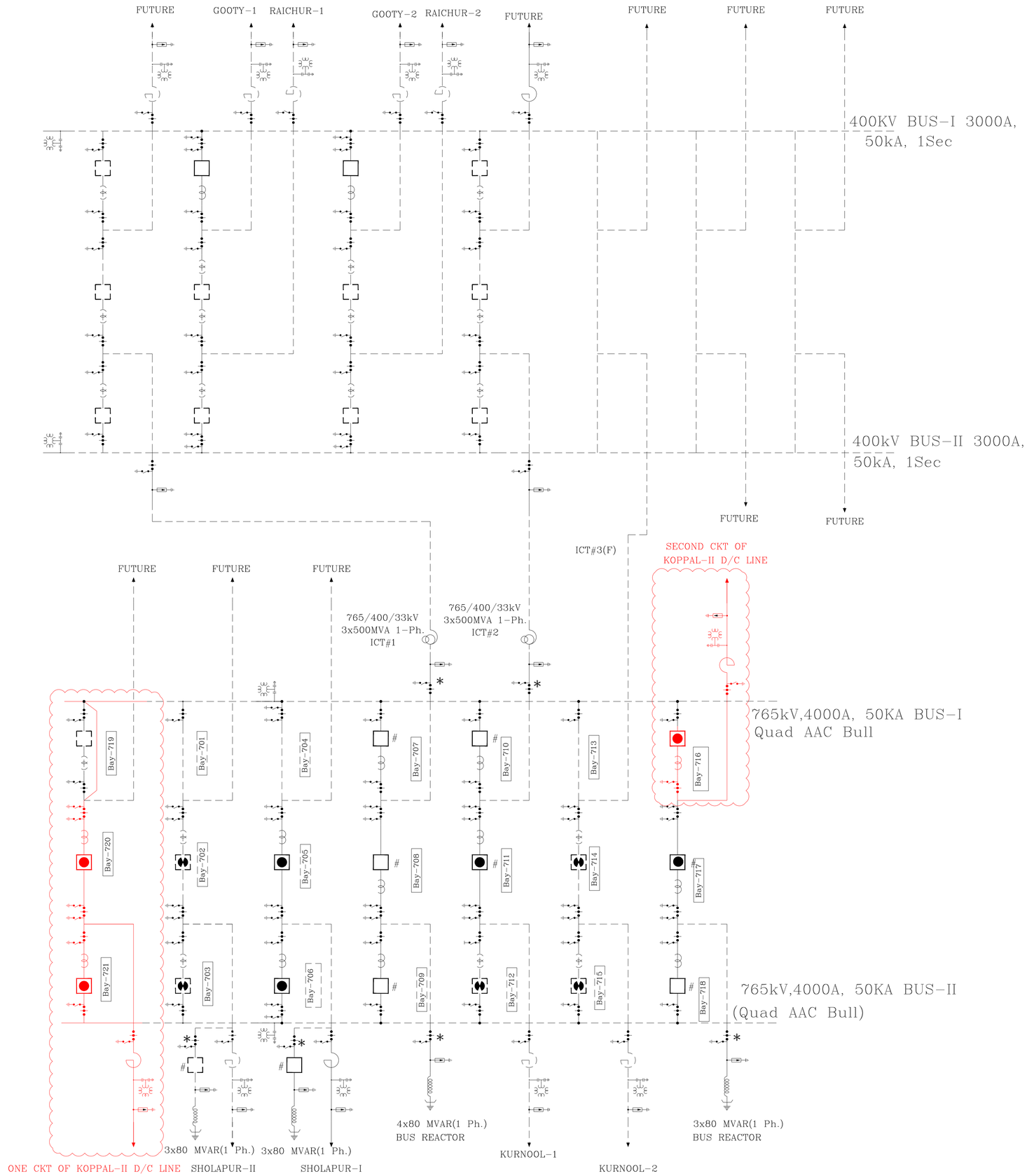

BILL OF QUANTITY – 765 kV

SL.	ITEM DESCRIPTION	SYMBOL
1	CIRCUIT BREAKER WITH CR 3150 A, 50 KA,1SEC	
2	ISOLATOR WITH ONE EARTH SWITCH 3150 A (3-ph.), 50KA	
3	ISOLATOR WITH TWO EARTH SWITCHES 3150 A (3-ph), 50KA	
4	CURRENT TRANSFORMER 3000/1 A, 50KA	
5	CAPACITOR VOLTAGE TRANSFORMER	
6	SURGE ARRESTER 624 kV	
7	WAVE TRAP	

LEGEND:

PRESENT SCOPE

EXISTING/FUTURE

FOR BAY ALLOCATION PURPOSE ONLY

POWER GRID CORPORATION OF INDIA LIMITED

(A GOVERNMENT OF INDIA ENTERPRISE)

PROJECT:
TRANSMISSION SCHEME FOR INTEGRATION OF RENEWABLE ENERGY ZONE (PHASE-II) IN KOPPAL-II (PHASE-B) IN KARNATAKA

SUBSTATION:
EXTENSION OF 765KV RAICHUR SUBSTATION

TITLE: SINGLE LINE DIAGRAM

DATE	DRAWN	DRG.NO.	REV
FEB 2023		C/ENGG/TBCB/KOPPAL-II PART-B/RAICHUR/SLD/01	0

NAGARJUNASAGAR 400kV S/S SINGLE LINE DIAGRAM

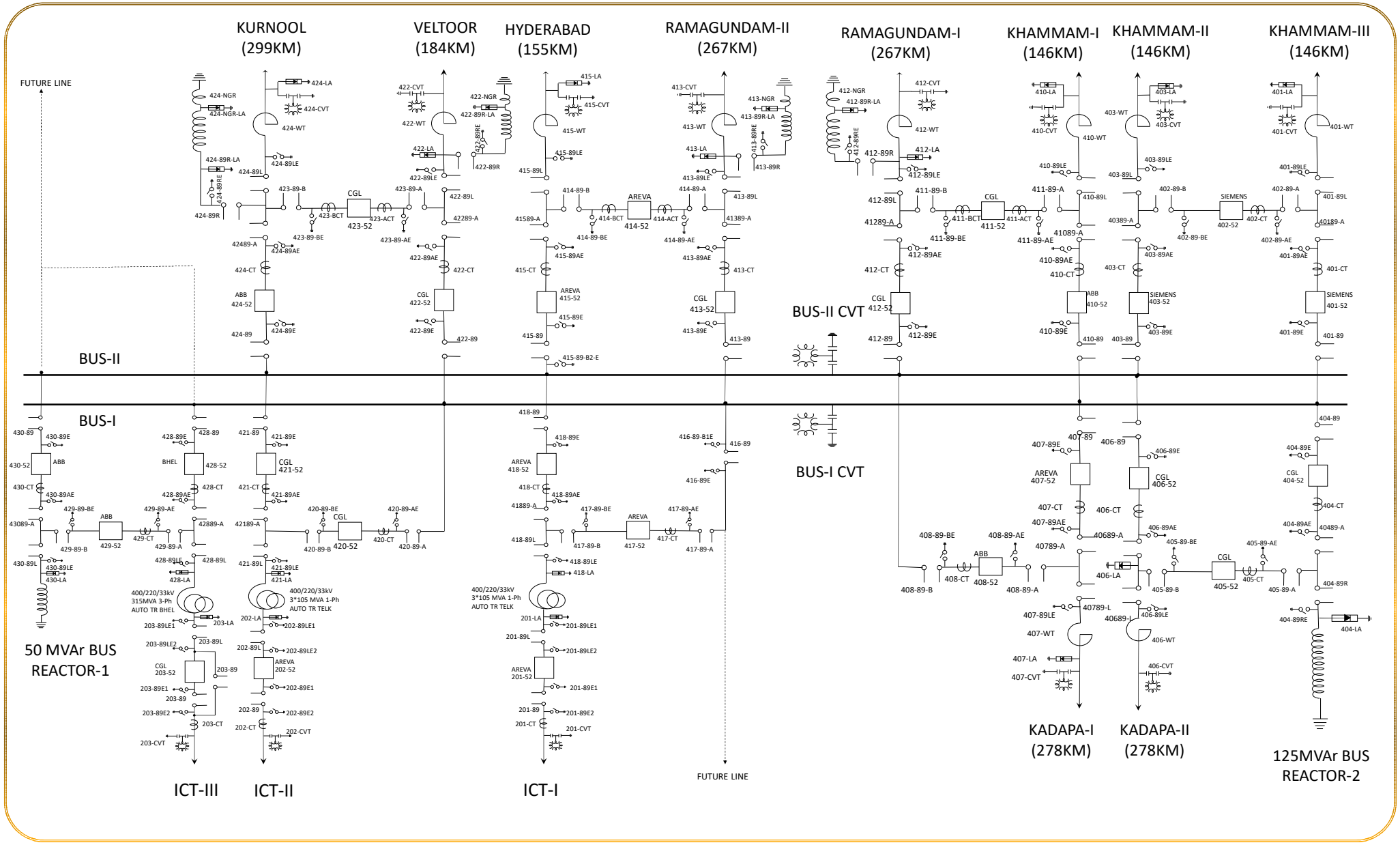

Drawing- NAGARJUNASAGAR/SLD